DIST	COUNTY	ROUTE	POST MILES TOTAL PROJECT	SHEET No.	TOTAL SHEETS
04	Nap	121	9.2/9.4	101	114

REGISTERED CIVIL ENGINEER 2-8-16 DATE

3-28-16
PLANS APPROVAL DATE

REGISTERED PROFESSIONAL ENGINEER PETER SOIN No. 37231 Exp. 6-30-16 CIVIL STATE OF CALIFORNIA

The State of California or its officers or agents shall not be responsible for the accuracy or completeness of scanned copies of this plan sheet.

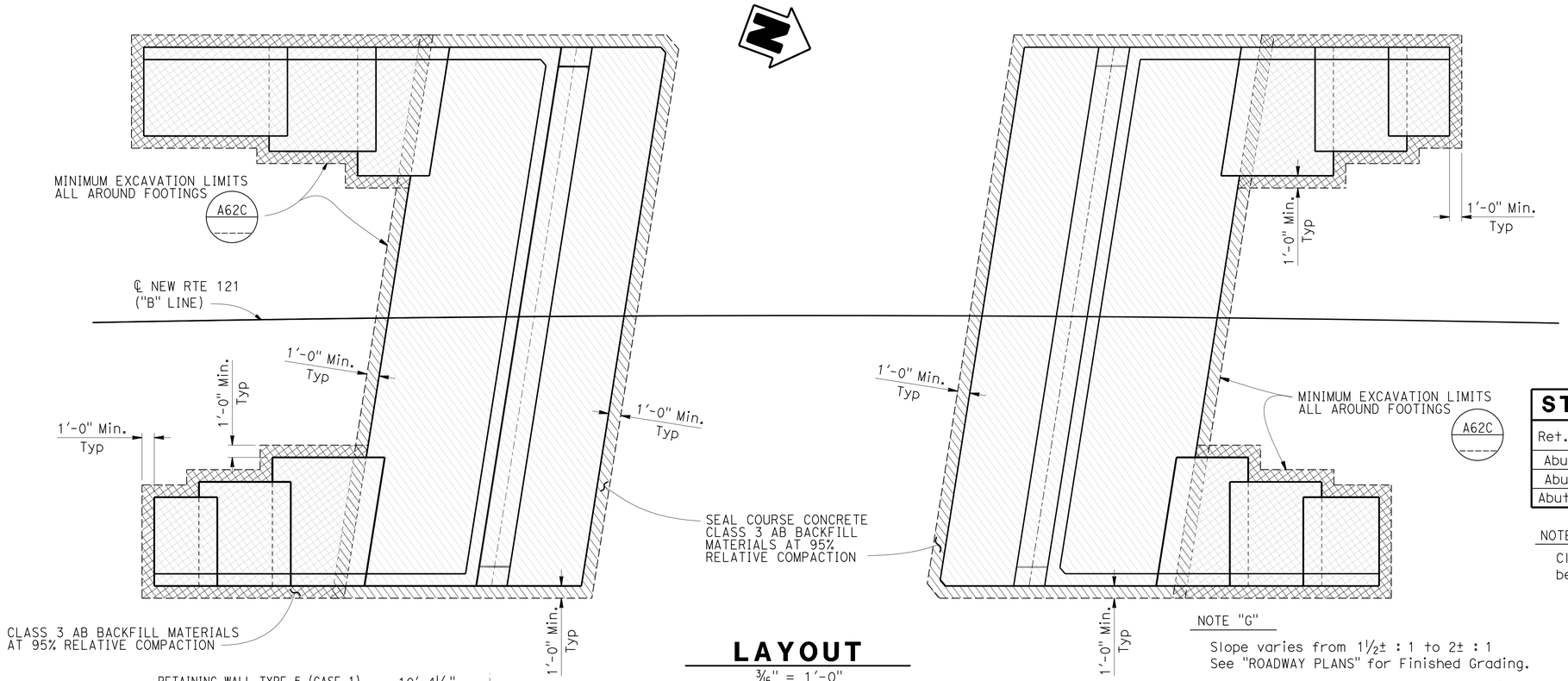

LAYOUT

3/16" = 1'-0"

NOTE "G"

Slope varies from 1½± : 1 to 2± : 1
See "ROADWAY PLANS" for Finished Grading.

SPREAD FOOTING DATA TABLE

SUPPORT NO.	SERVICE PERMISSIBLE NET CONTACT STRESS (SETTLEMENT) (ksf)	STRENGTH/ CONSTRUCTION FACTORED GROSS NOMINAL BEARING RESISTANCE Φ_b = 0.45 (ksf)	EXTREME EVENT FACTORED GROSS NOMINAL BEARING RESISTANCE Φ_b = 1.0(ksf)
Abut. 1	1.0	7.0	15.5
Abut. 2	0.9	4.6	10.2

STRUCTURE SUB-EX. & AB3 BACKFILL

Ret. WALL LOCATION	DIMENSION "A"	DIMENSION "B"	DIMENSION "C"
Abut. 1 LEFT SIDE	2'-0"	2'-0"	5'-0"
Abut. 2 LEFT SIDE	5'-0"	2'-0"	5'-0"
Abut. 2 RIGHT SIDE	5'-0"	2'-0"	5'-0"

NOTE

Class B2 Subgrade Enhancement Geotextile material to be placed under and to the sides of Class 3 AB backfill.

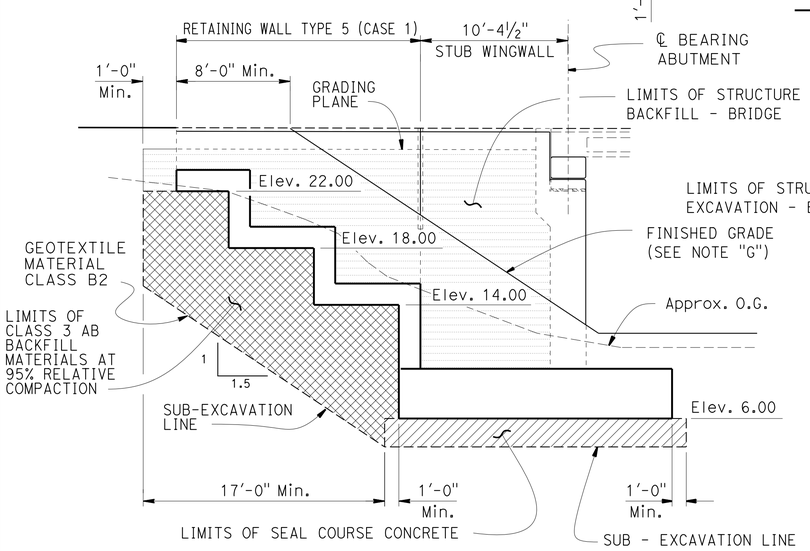

BACKFILL

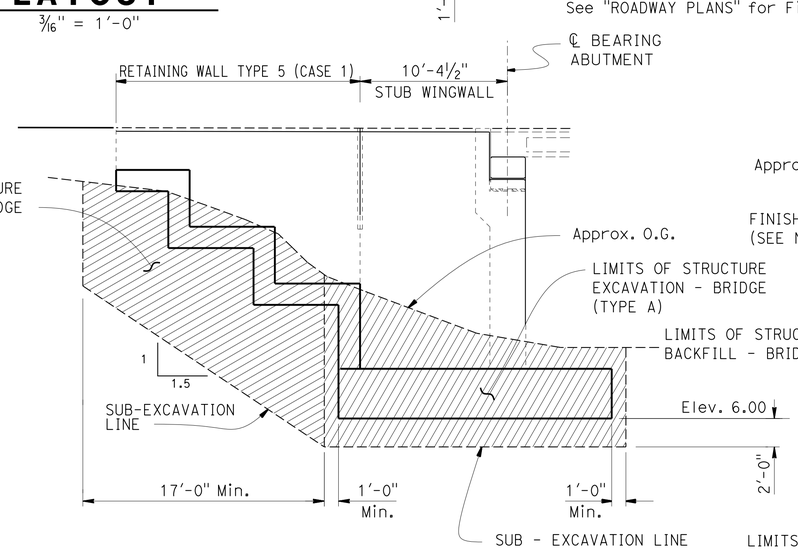

EXCAVATION

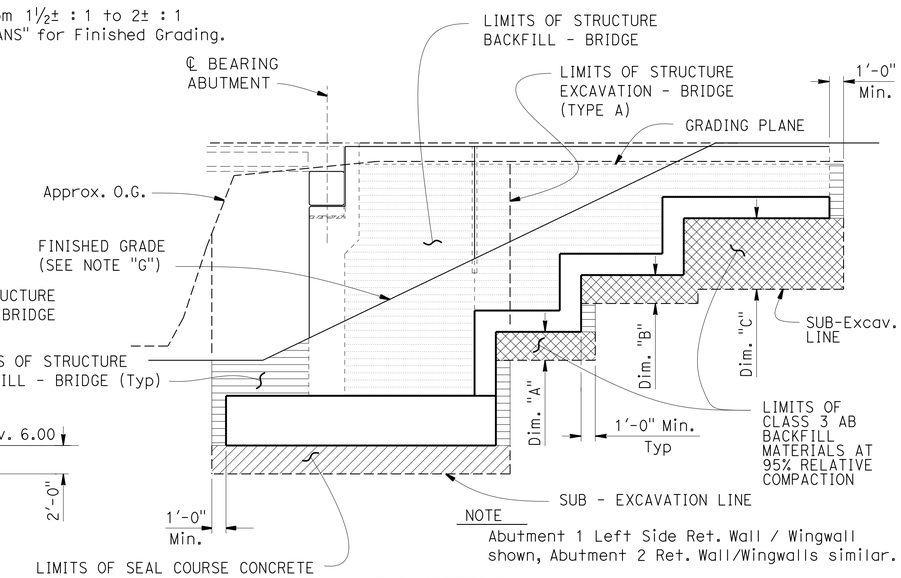

NOTE

Abutment 1 Left Side Ret. Wall / Wingwall shown, Abutment 2 Ret. Wall/Wingwalls similar.

BACKFILL

ABUTMENT 1 RIGHT SIDE RETAINING WALL / WINGWALL ELEVATION

3/16" = 1'-0"

ABUTMENT 1 LEFT SIDE RETAINING WALL / WINGWALL ELEVATION

3/16" = 1'-0"

	BY	CHECKED
DESIGN	Peter Soin	Qi Zhao
DETAILS	Jeff Thorne	Qi Zhao
QUANTITIES	Peter Soin	Qi Zhao

STATE OF CALIFORNIA
DEPARTMENT OF TRANSPORTATION

DIVISION OF ENGINEERING SERVICES
STRUCTURE DESIGN
DESIGN BRANCH 4

BRIDGE NO. 21-0008
POST MILE 9.3

SARCO CREEK BRIDGE (REPLACE)
SUB-EXCAVATION AND BACKFILL

STRUCTURES DESIGN DETAIL SHEET (ENGLISH) (REV. 09-01-10)

ORIGINAL SCALE IN INCHES FOR REDUCED PLANS 0 1 2 3

UNIT: 59-3579
PROJECT NUMBER & PHASE: 0400000817 4 CONTRACT NO.: 04-2A3204

DISREGARD PRINTS BEARING EARLIER REVISION DATES

REVISION DATES 1-15-16 1-29-16 2-16-16

SHEET 5 OF 18

FILE => 21-0008-c-xnbf01.dgn

USERNAME => s126849 DATE PLOTTED => 04-AUG-2016 TIME PLOTTED => 14:32

DIST	COUNTY	ROUTE	POST MILES TOTAL PROJECT	SHEET No.	TOTAL SHEETS
04	Nap	121	9.2/9.4	102	114

REGISTERED CIVIL ENGINEER 2-8-16 DATE

3-28-16
PLANS APPROVAL DATE

REGISTERED PROFESSIONAL ENGINEER PETER SOIN No. 37231 Exp. 6-30-16 CIVIL STATE OF CALIFORNIA

The State of California or its officers or agents shall not be responsible for the accuracy or completeness of scanned copies of this plan sheet.

* H = Retaining Wall Type 5 Design Height.

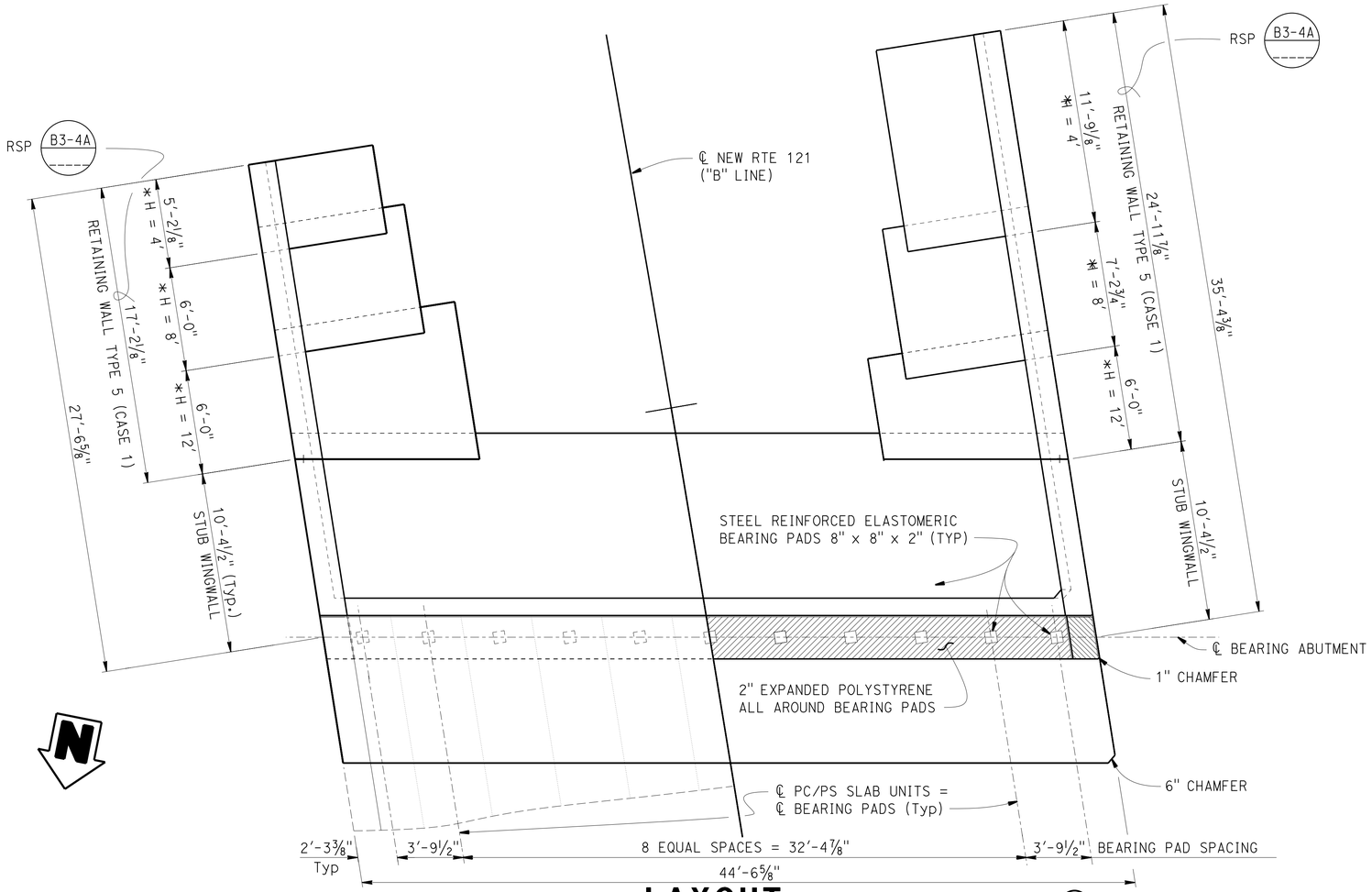

LAYOUT

¼" = 1'-0"

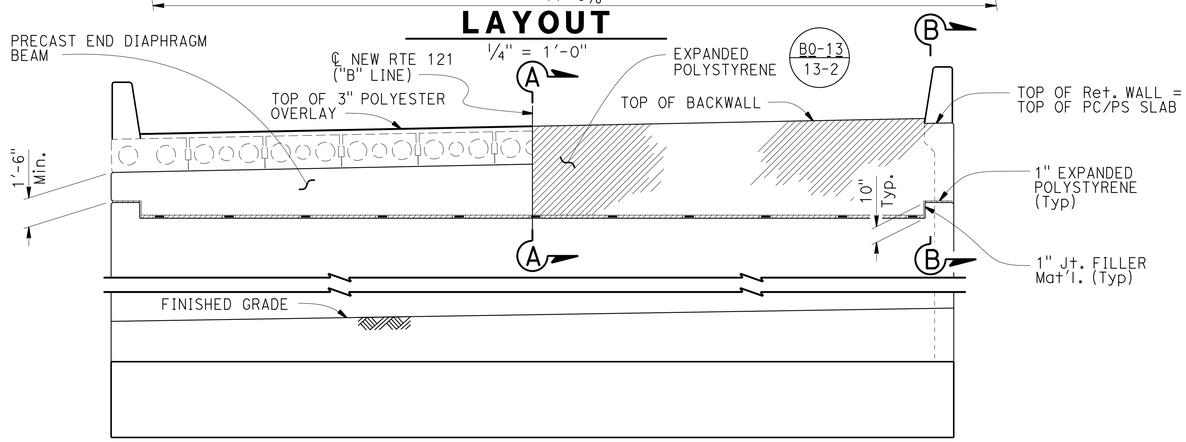

ELEVATION

¼" = 1'-0"

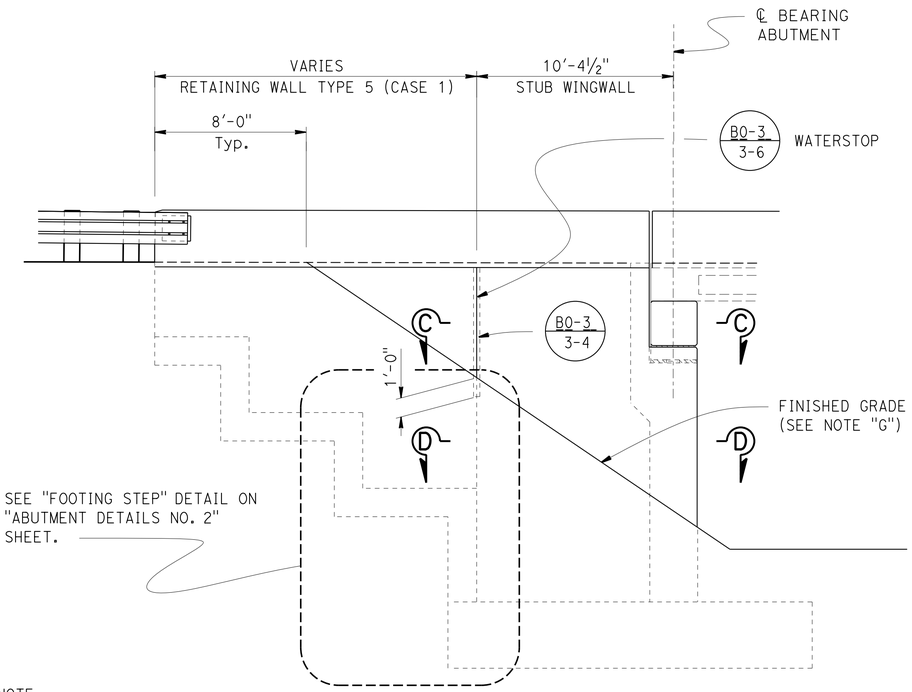

NOTE

Electrical conduit not shown for clarity.

NOTE "G"

Slope varies from 1½± : 1 to 2± : 1
See "ROADWAY PLANS" for Finished Grading.

TYPICAL RETAINING WALL / WINGWALL ELEVATION

¼" = 1'-0"

DESIGN	BY Peter Soin	CHECKED Qi Zhao	
DETAILS	BY Jeff Thorne	CHECKED Qi Zhao	
QUANTITIES	BY Peter Soin	CHECKED Qi Zhao	

STATE OF CALIFORNIA
DEPARTMENT OF TRANSPORTATION

DIVISION OF ENGINEERING SERVICES
STRUCTURE DESIGN
DESIGN BRANCH 4

BRIDGE NO. 21-0008
POST MILE 9.3

SARCO CREEK BRIDGE (REPLACE)
ABUTMENT 1 LAYOUT

STRUCTURES DESIGN DETAIL SHEET (ENGLISH) (REV. 09-01-10)

ORIGINAL SCALE IN INCHES FOR REDUCED PLANS 0 1 2 3

UNIT: 59-3579
PROJECT NUMBER & PHASE: 0400000817 4
CONTRACT NO.: 04-2A3204

DISREGARD PRINTS BEARING EARLIER REVISION DATES

REVISION DATES 11-18-15 12-28-15 1-22-16

SHEET 6 OF 18

FILE => 21-0008-d-abt01la.dgn

USERNAME => s126849 DATE PLOTTED => 04-AUG-2016 TIME PLOTTED => 14:32

DIST	COUNTY	ROUTE	POST MILES TOTAL PROJECT	SHEET No.	TOTAL SHEETS
04	Nap	121	9.2/9.4	103	114

REGISTERED CIVIL ENGINEER 2-8-16 DATE

3-28-16
PLANS APPROVAL DATE

REGISTERED PROFESSIONAL ENGINEER PETER SOIN No. 37231 Exp. 6-30-16 CIVIL STATE OF CALIFORNIA

The State of California or its officers or agents shall not be responsible for the accuracy or completeness of scanned copies of this plan sheet.

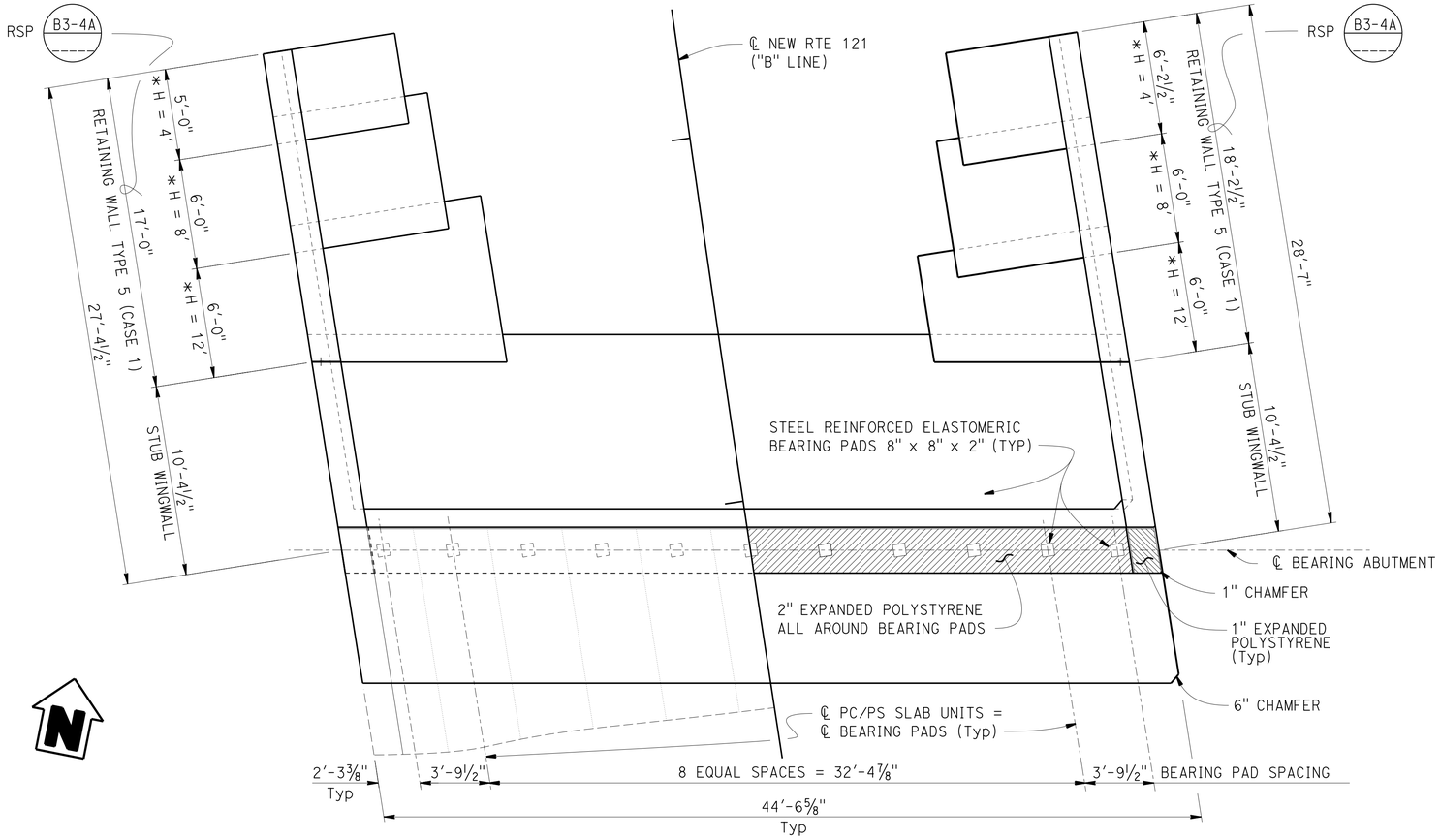

* H = Retaining Wall Type 5 Design Height.

LAYOUT

¼" = 1'-0"

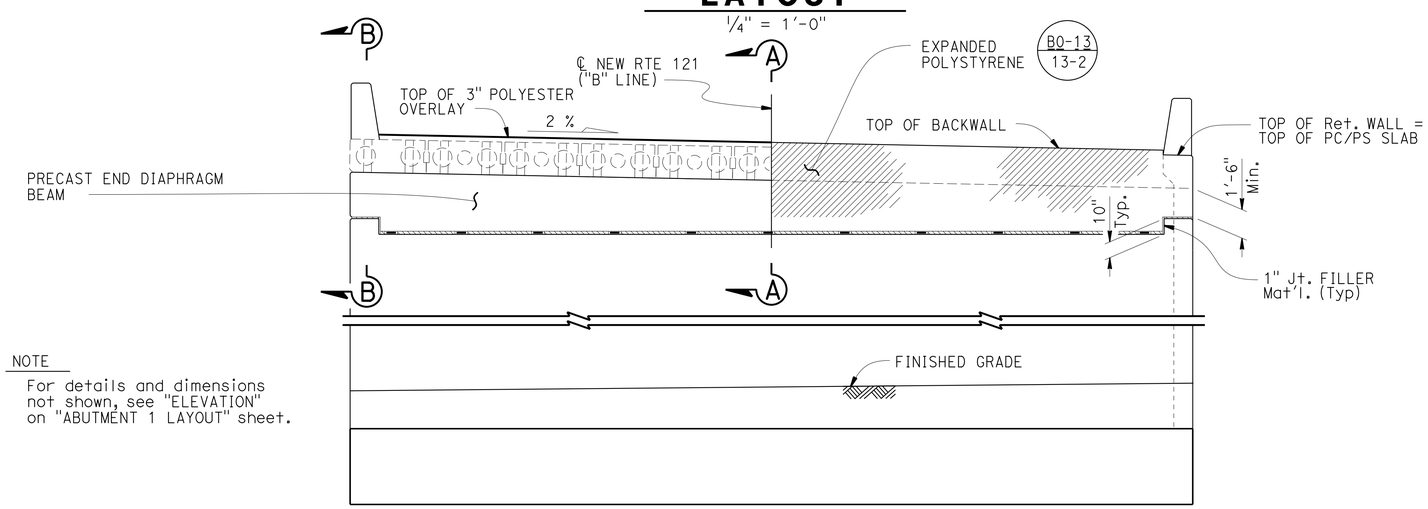

NOTE

For details and dimensions not shown, see "ELEVATION" on "ABUTMENT 1 LAYOUT" sheet.

ELEVATION

¼" = 1'-0"

DESIGN	BY Peter Soin	CHECKED Qi Zhao	
DETAILS	BY Jeff Thorne	CHECKED Qi Zhao	
QUANTITIES	BY Peter Soin	CHECKED Qi Zhao	

STATE OF CALIFORNIA
DEPARTMENT OF TRANSPORTATION

DIVISION OF ENGINEERING SERVICES
STRUCTURE DESIGN
DESIGN BRANCH 4

BRIDGE NO. 21-0008
POST MILE 9.3

SARCO CREEK BRIDGE (REPLACE)
ABUTMENT 2 LAYOUT

STRUCTURES DESIGN DETAIL SHEET (ENGLISH) (REV. 09-01-10)

ORIGINAL SCALE IN INCHES FOR REDUCED PLANS 0 1 2 3

UNIT: 59-3579
PROJECT NUMBER & PHASE: 0400000817 4
CONTRACT NO.: 04-2A3204

DISREGARD PRINTS BEARING EARLIER REVISION DATES

REVISION DATES 11-18-15 12-28-15 1-22-16

SHEET 7 OF 18

FILE => 21-0008-d-abt02la.dgn

USERNAME => s126849 DATE PLOTTED => 04-AUG-2016 TIME PLOTTED => 14:32

DIST	COUNTY	ROUTE	POST MILES TOTAL PROJECT	SHEET No.	TOTAL SHEETS
04	Nap	121	9.2/9.4	104	114

REGISTERED CIVIL ENGINEER 2-8-16 DATE

3-28-16
PLANS APPROVAL DATE

REGISTERED PROFESSIONAL ENGINEER PETER SOIN No. 37231 Exp. 6-30-16 CIVIL STATE OF CALIFORNIA

The State of California or its officers or agents shall not be responsible for the accuracy or completeness of scanned copies of this plan sheet.

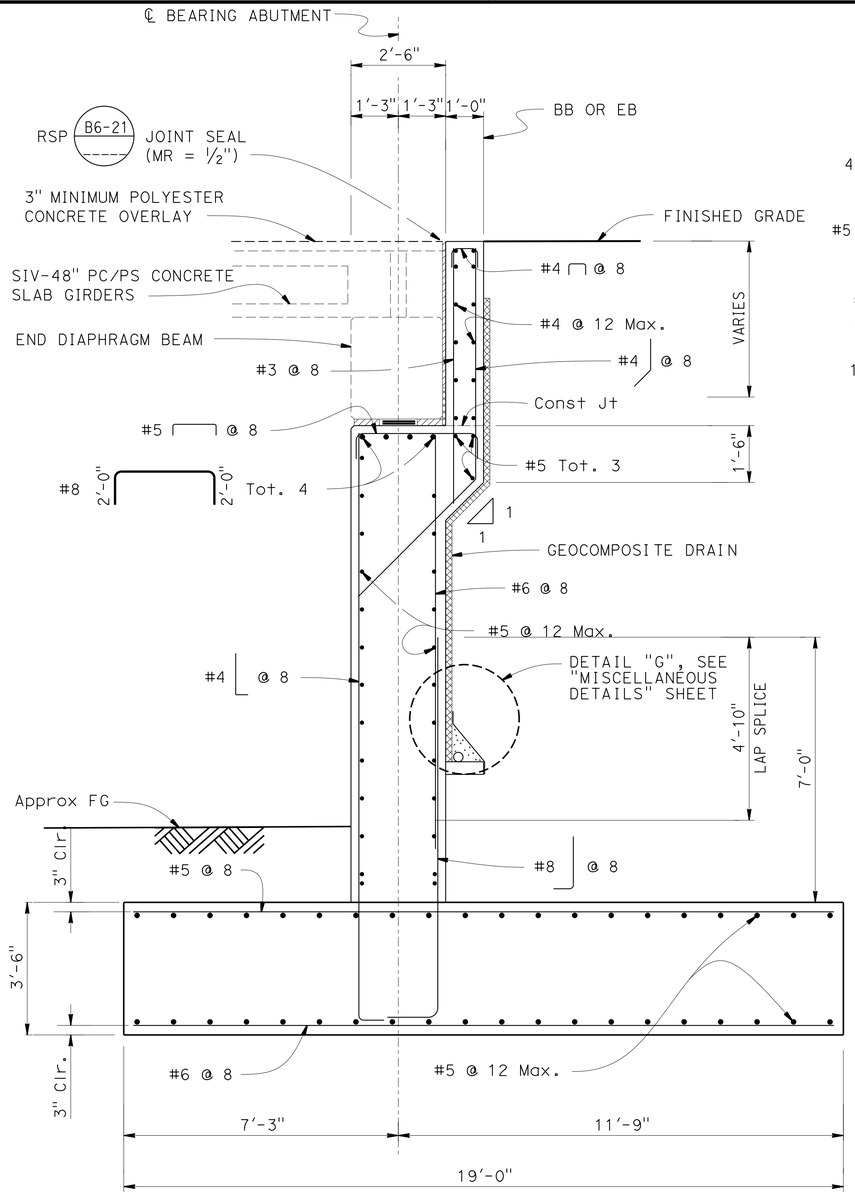

ABUTMENT SECTION

1/2" = 1'-0"

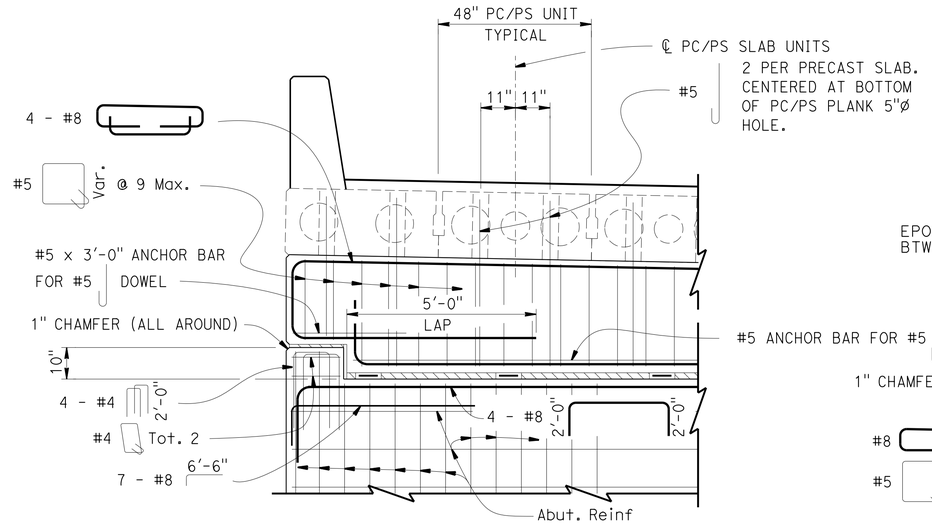

ABUTMENT PART ELEVATION

1/2" = 1'-0"

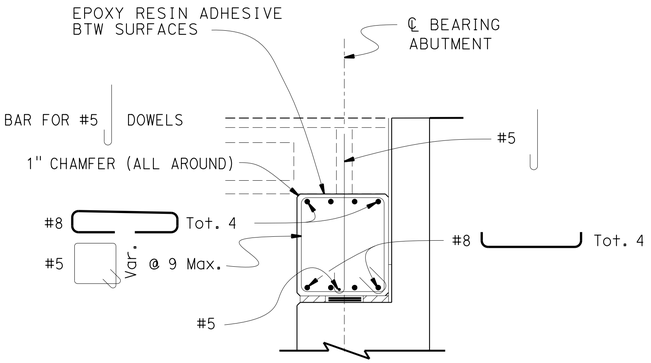

SECTION A-A

1/2" = 1'-0"

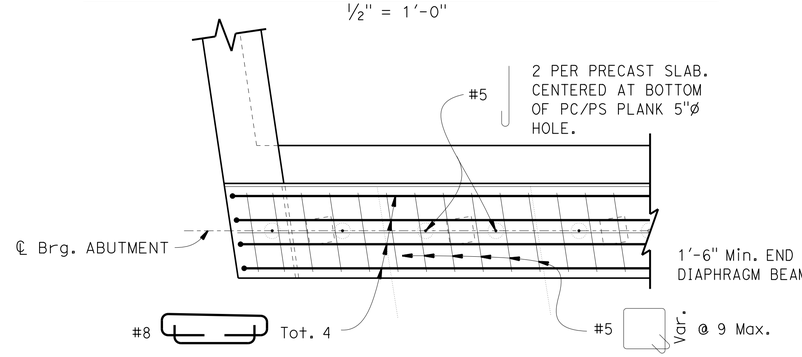

END DIAPHRAGM BEAM DETAIL

1/2" = 1'-0"

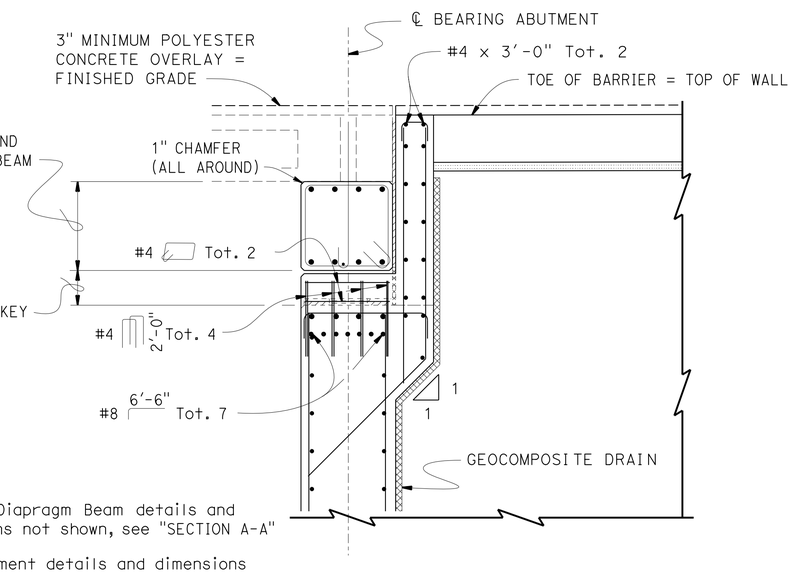

NOTES

For End Diapragm Beam details and dimensions not shown, see "SECTION A-A"

For Abutment details and dimensions not shown, see "ABUTMENT SECTION"

Stub Wingwall reinforcement not shown for clarity.

SECTION B-B

1/2" = 1'-0"

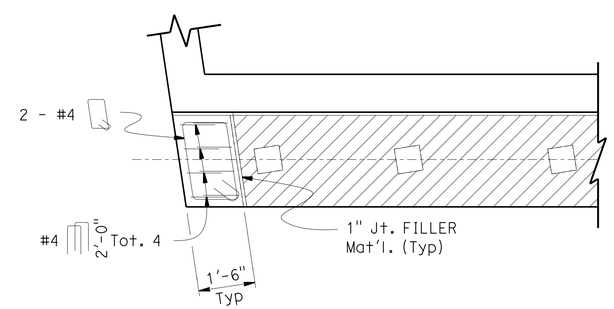

END DIAPHRAGM BEAM SHEAR KEY DETAIL

1/2" = 1'-0"

DESIGN	BY Peter Soin	CHECKED Qi Zhao	
DETAILS	BY Jeff Thorne	CHECKED Qi Zhao	
QUANTITIES	BY Peter Soin	CHECKED Qi Zhao	

STATE OF CALIFORNIA
DEPARTMENT OF TRANSPORTATION

DIVISION OF ENGINEERING SERVICES
STRUCTURE DESIGN
DESIGN BRANCH 4

BRIDGE NO. 21-0008
POST MILE 9.3

SARCO CREEK BRIDGE (REPLACE)
ABUTMENT DETAILS NO. 1

STRUCTURES DESIGN DETAIL SHEET (ENGLISH) (REV. 09-01-10)

ORIGINAL SCALE IN INCHES FOR REDUCED PLANS 0 1 2 3

UNIT: 59-3579
PROJECT NUMBER & PHASE: 0400000817 4 CONTRACT NO.: 04-2A3204

DISREGARD PRINTS BEARING EARLIER REVISION DATES

REVISION DATES: 11-18-15 12-18-15 1-22-16 2-16-16

SHEET 8 OF 18

FILE => 21-0008-d-abtdts01.dgn

USERNAME => s128849 DATE PLOTTED => 04-AUG-2016 TIME PLOTTED => 14:32

DIST	COUNTY	ROUTE	POST MILES TOTAL PROJECT	SHEET No.	TOTAL SHEETS
04	Nap	121	9.2/9.4	105	114

REGISTERED CIVIL ENGINEER 2-8-16 DATE

3-28-16
PLANS APPROVAL DATE

REGISTERED PROFESSIONAL ENGINEER PETER SOIN No. 37231 Exp. 6-30-16 CIVIL STATE OF CALIFORNIA

The State of California or its officers or agents shall not be responsible for the accuracy or completeness of scanned copies of this plan sheet.

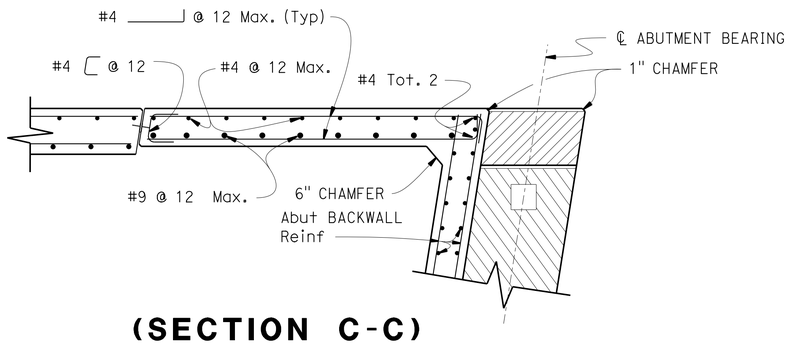

(SECTION C-C) TYPICAL ACUTE CORNER

½" = 1'-0"

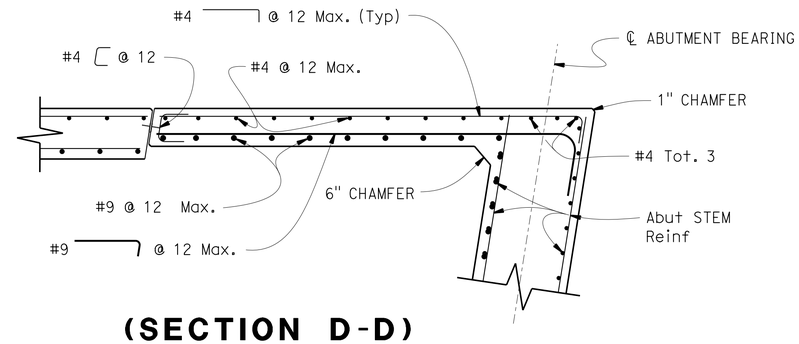

(SECTION D-D) TYPICAL ACUTE CORNER

½" = 1'-0"

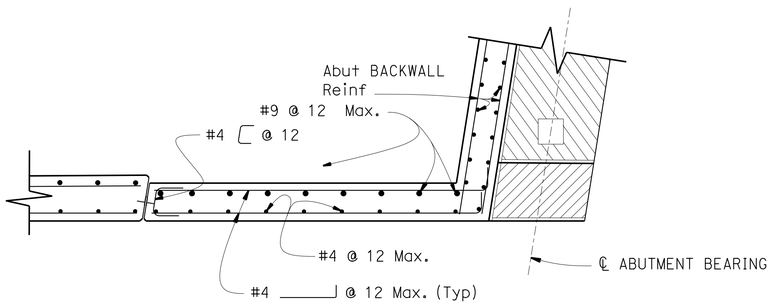

(SECTION C-C) TYPICAL OBTUSE CORNER

½" = 1'-0"

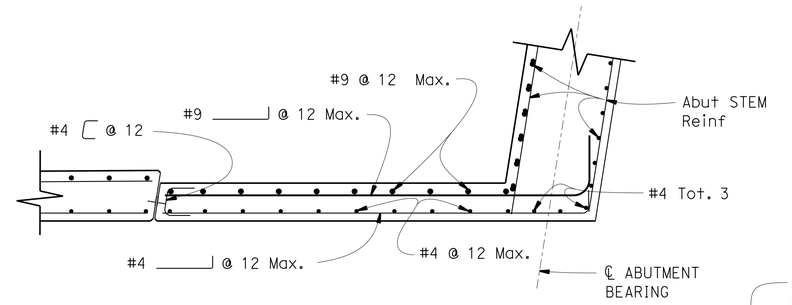

(SECTION D-D) TYPICAL OBTUSE CORNER

½" = 1'-0"

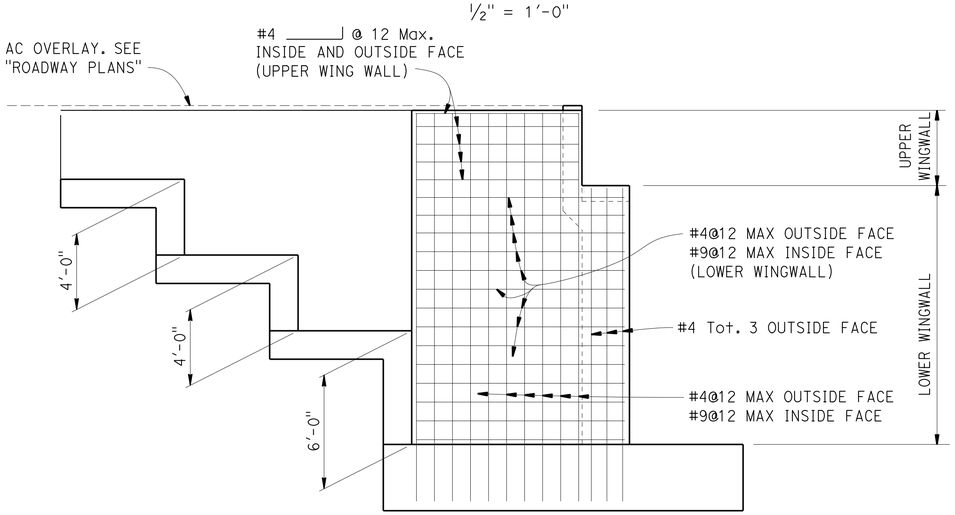

TYPICAL STUB WINGWALL ELEVATION

¼" = 1'-0"

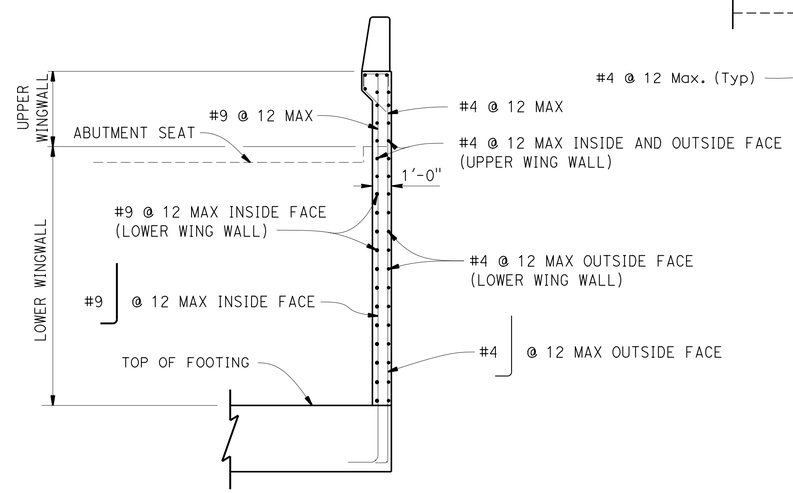

STUB WINGWALL SECTION

¼" = 1'-0"

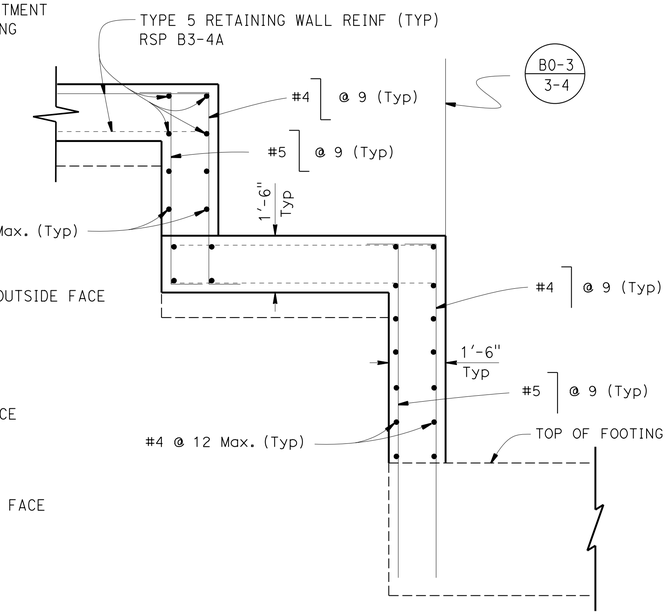

FOOTING STEP

½" = 1'-0"

DESIGN	BY Peter Soin	CHECKED Qi Zhao	
DETAILS	BY Jeff Thorne	CHECKED Qi Zhao	
QUANTITIES	BY Peter Soin	CHECKED Qi Zhao	

STATE OF CALIFORNIA
DEPARTMENT OF TRANSPORTATION

DIVISION OF ENGINEERING SERVICES
STRUCTURE DESIGN
DESIGN BRANCH 4

BRIDGE NO. 21-0008
POST MILE 9.3

SARCO CREEK BRIDGE (REPLACE)
ABUTMENT DETAILS NO. 2

STRUCTURES DESIGN DETAIL SHEET (ENGLISH) (REV. 09-01-10)

ORIGINAL SCALE IN INCHES FOR REDUCED PLANS 0 1 2 3

UNIT: 59-3579
PROJECT NUMBER & PHASE: 0400000817 4
CONTRACT NO.: 04-2A3204

DISREGARD PRINTS BEARING EARLIER REVISION DATES

REVISION DATES 11-18-15 12-18-15 1-22-16

SHEET 9 OF 18

FILE => 21-0008-d-abtdts02.dgn

USERNAME => s126849 DATE PLOTTED => 04-AUG-2016 TIME PLOTTED => 14:32

DIST	COUNTY	ROUTE	POST MILES TOTAL PROJECT	SHEET No.	TOTAL SHEETS
04	Nap	121	9.2/9.4	106	114

REGISTERED CIVIL ENGINEER 2-8-16 DATE

3-28-16
PLANS APPROVAL DATE

REGISTERED PROFESSIONAL ENGINEER PETER SOIN No. 37231 Exp. 6-30-16 CIVIL STATE OF CALIFORNIA

The State of California or its officers or agents shall not be responsible for the accuracy or completeness of scanned copies of this plan sheet.

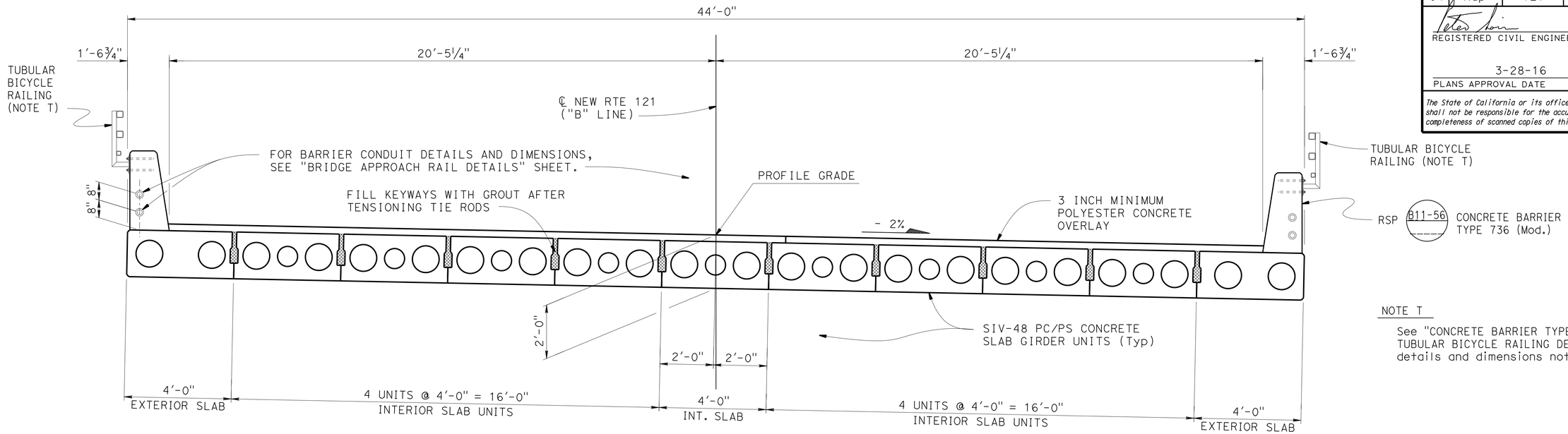

TYPICAL SECTION

½" = 1'-0"

NOTE T

See "CONCRETE BARRIER TYPE 80, 732 & 736 TUBULAR BICYCLE RAILING DETAILS" sheet for details and dimensions not shown.

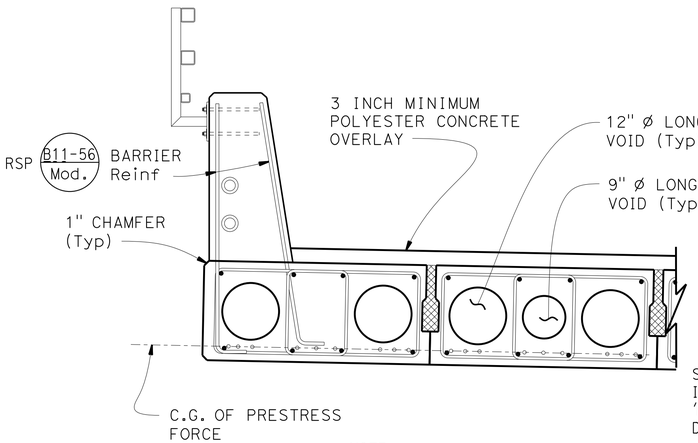

NOTE

For PC/PS slab reinforcement, details and dimensions not shown, see 'PRECAST P/S CONCRETE SLAB DETAILS' sheet.

PART TYPICAL SECTION

¾" = 1'-0"

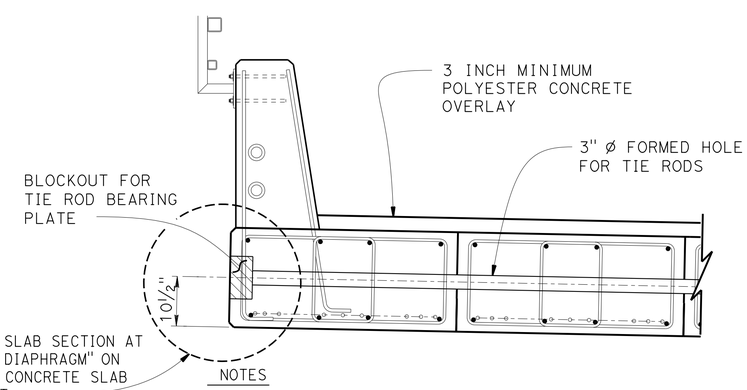

NOTES

For details and dimensions not shown, see 'PART TYPICAL SECTION'.

Note that slab edge keyways and longitudinal voids do not extend through intermediate diaphragms

PART TYPICAL SECTION AT INTERMEDIATE DIAPHRAGMS

¾" = 1'-0"

GROUT TABLE

LOCATION	GROUT TYPE	MINIMUM STRENGTH FOR LOAD TRANSFER	MINIMUM STRENGTH AT 28 DAYS
SLAB GIRDER Longit. KEYWAYS	NON SHRINK	5 ksi	5 ksi

	BY	CHECKED
DESIGN	Peter Soin	Qi Zhao
DETAILS	Jeff Thorne	Qi Zhao
QUANTITIES	Peter Soin	Qi Zhao

STATE OF CALIFORNIA
DEPARTMENT OF TRANSPORTATION

DIVISION OF ENGINEERING SERVICES
STRUCTURE DESIGN
DESIGN BRANCH 4

BRIDGE NO. 21-0008
POST MILE 9.3

SARCO CREEK BRIDGE (REPLACE)
TYPICAL SECTION

STRUCTURES DESIGN DETAIL SHEET (ENGLISH) (REV. 09-01-10)

ORIGINAL SCALE IN INCHES FOR REDUCED PLANS 0 1 2 3

UNIT: 04
PROJECT NUMBER & PHASE: 0400000817 4
CONTRACT NO.: 04-2A3204

DISREGARD PRINTS BEARING EARLIER REVISION DATES

REVISION DATES 8-18-15 12-21-15 1-28-16 2-16-16

SHEET 10 OF 18

FILE => 21-0008-d-typ.dgn

USERNAME => s126849 DATE PLOTTED => 04-AUG-2016 TIME PLOTTED => 14:32

DIST	COUNTY	ROUTE	POST MILES TOTAL PROJECT	SHEET No.	TOTAL SHEETS
04	Nap	121	9.2/9.4	107	114

REGISTERED CIVIL ENGINEER 2-8-16 DATE

3-28-16
PLANS APPROVAL DATE

REGISTERED PROFESSIONAL ENGINEER PETER SOIN No. 37231 Exp. 6-30-16 CIVIL STATE OF CALIFORNIA

The State of California or its officers or agents shall not be responsible for the accuracy or completeness of scanned copies of this plan sheet.

GENERAL NOTES

1. The Jacking Force (P_J) is the jacking force required at the point of control along the span. The jacking force does not include any fabrication specific losses.
2. The maximum tensile stress in the prestressing steel upon release shall not exceed 75% of the specified minimum ultimate tensile strength of the prestressing steel. Prestressing Strand shall be 270 ksi low relaxation steel.
3. The maximum temporary tensile stress (jacking stress) in the prestressing steel shall not exceed 80% of the specified minimum ultimate tensile strength of the prestressing steel.
4. Concrete Strength:
   f'ci is at time of initial stressing
   f'c is at 28 days
5. Keyways to be filled with grout after ¾" ø Tie Rods are tensioned.
6. See other sheets for railing requirements.
7. Concrete barriers to be cast after Tie Rods are tensioned and keyways are grouted.

Girder location or designation and length	Jacking Force (P_J) in Kips	Concrete Strength (ksi)	
		f'_{ci}	f'_c
EXTERIOR	681.6	4.0	5.0
INTERIOR	619.6	4.0	5.0

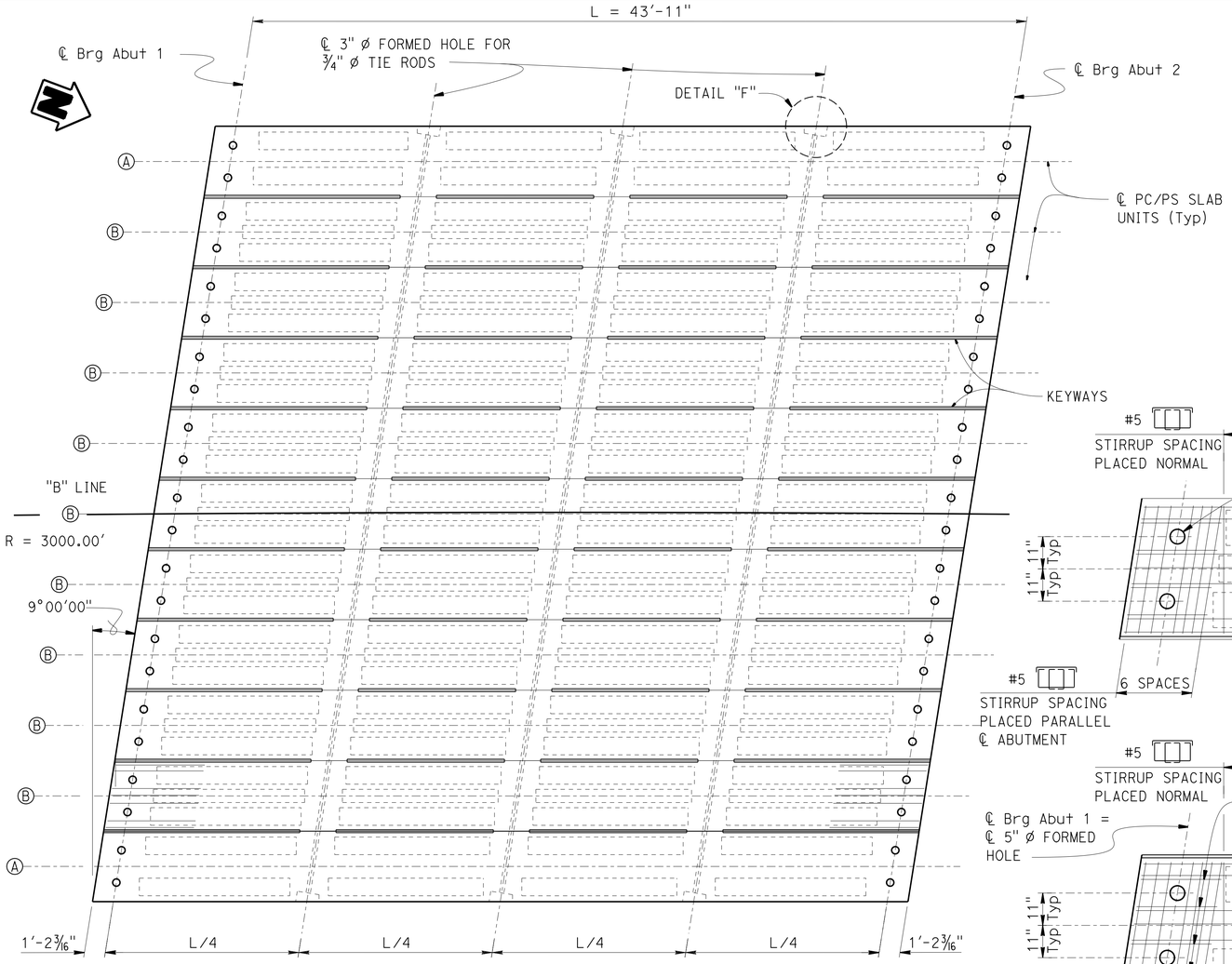

LAYOUT

¼" = 1'-0"

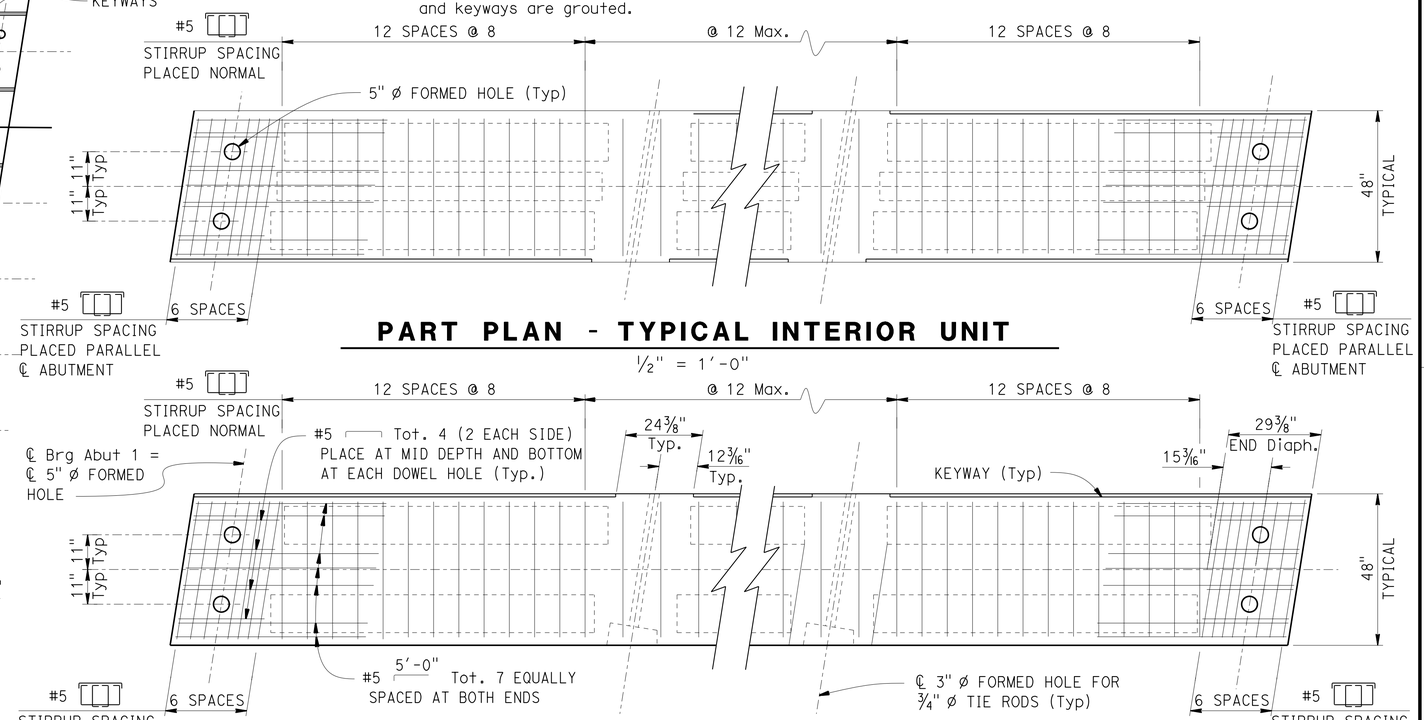

PART PLAN - TYPICAL INTERIOR UNIT

½" = 1'-0"

PART PLAN - TYPICAL EXTERIOR UNIT

½" = 1'-0"

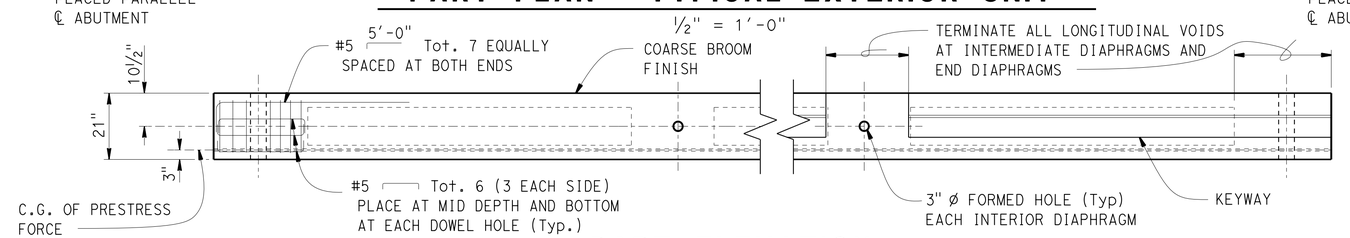

PART ELEVATION

½" = 1'-0"

NOTES

1. Non-factored instantaneous deflections due to concrete barrier weight at mid-span is approximate 0.05"
2. 27.3 % of prestress strands to be unbonded for 7.0' at ends of exterior girders.
3. 30.0 % of prestress strands to be unbonded for 7.0' at ends of interior girders.

	BY	CHECKED
DESIGN	Peter Soin	Qi Zhao
DETAILS	Jeff Thorne	Qi Zhao
QUANTITIES	Peter Soin	Qi Zhao

STATE OF CALIFORNIA
DEPARTMENT OF TRANSPORTATION

DIVISION OF ENGINEERING SERVICES
STRUCTURE DESIGN
DESIGN BRANCH 4

BRIDGE NO. 21-0008
POST MILE 9.3

SARCO CREEK BRIDGE (REPLACE)
PRECAST P/S SLAB LAYOUT

STRUCTURES DESIGN DETAIL SHEET (ENGLISH) (REV. 09-01-10)

ORIGINAL SCALE IN INCHES FOR REDUCED PLANS 0 1 2 3

UNIT: 04
PROJECT NUMBER & PHASE: 0400000817 4
CONTRACT NO.: 04-2A3204

DISREGARD PRINTS BEARING EARLIER REVISION DATES

REVISION DATES 12-22-15 1-5-16 1-20-16

SHEET 11 OF 18

FILE => 21-0008-e-pcsibio.dgn

USERNAME => s126849 DATE PLOTTED => 04-AUG-2016 TIME PLOTTED => 14:32

DIST	COUNTY	ROUTE	POST MILES TOTAL PROJECT	SHEET No.	TOTAL SHEETS
04	Nap	121	9.2/9.4	108	114

REGISTERED CIVIL ENGINEER 2-8-16 DATE

3-28-16
PLANS APPROVAL DATE

REGISTERED PROFESSIONAL ENGINEER PETER SOIN No. 37231 Exp. 6-30-16 CIVIL STATE OF CALIFORNIA

The State of California or its officers or agents shall not be responsible for the accuracy or completeness of scanned copies of this plan sheet.

SLAB GENERAL NOTES

1. P_J = is the force required at center of span after all losses.
2. Slab designed for pretensioning.
3. Deflection components are instantaneous deflections at midspan, and are for informational purposes only, to be used in setting deck screed line elevations.
4. Screed line elevations for deck concrete will be determined by the engineer.
5. Keyways to be filled with grout.
6. See other sheets for railing requirements.
7. Broom finish top of slab for Polyester Concrete Overlay.

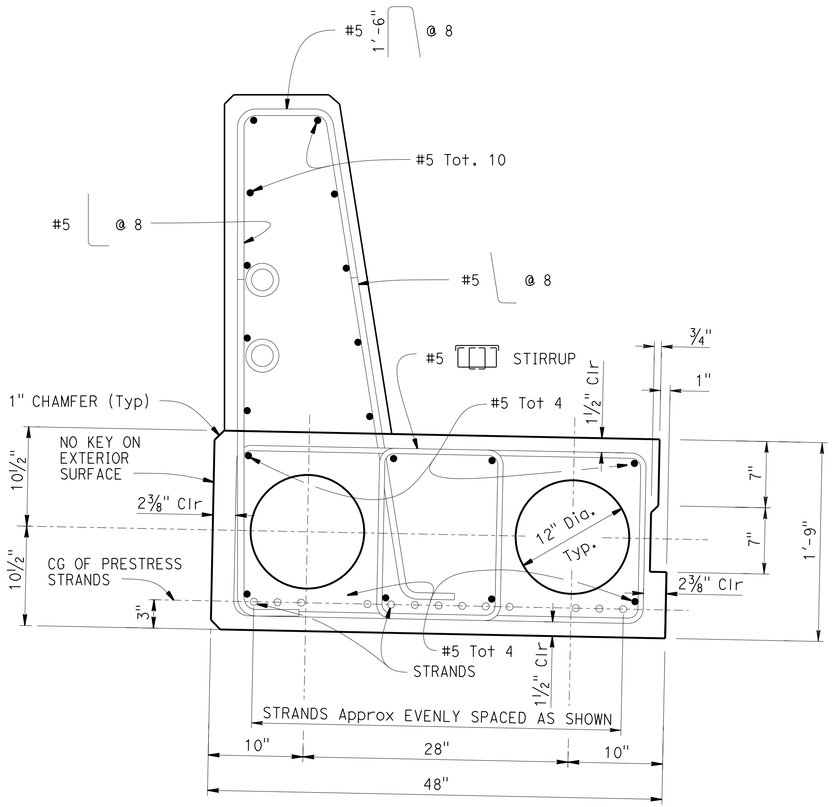

TYPICAL EXTERIOR SLAB UNIT

1½" = 1'-0"

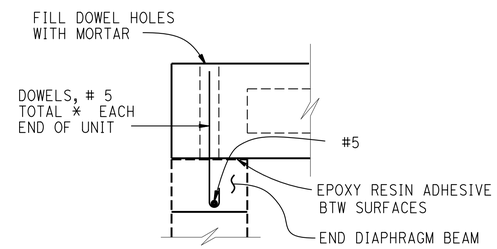

SUPPORT DETAILS AT ABUTMENTS

NO SCALE

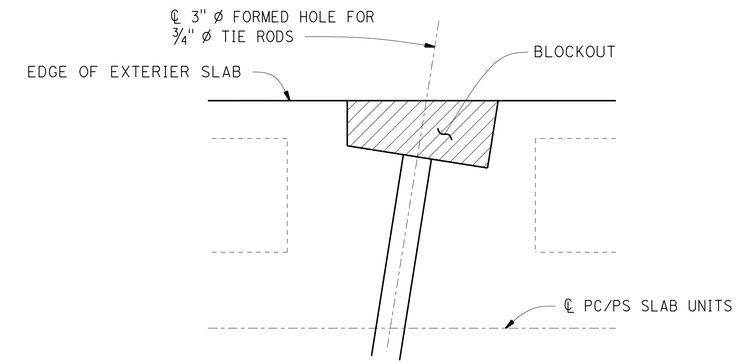

DETAIL "F"

1½" = 1'-0"

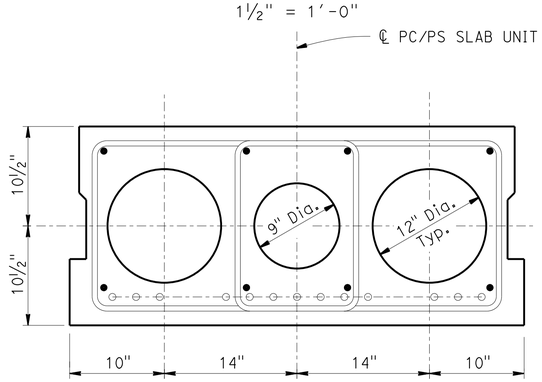

NOTES

1. For details and dimenions not shown, see "TYPICAL EXTERIOR SLAB UNIT"

TYPICAL INTERIOR SLAB UNIT

1½" = 1'-0"

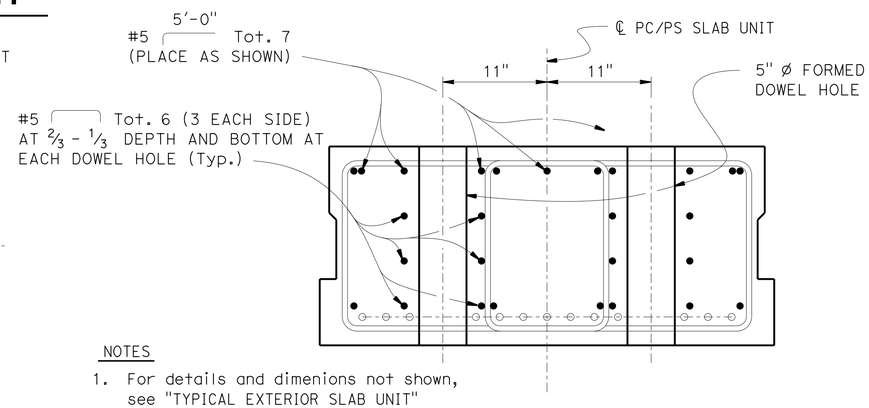

NOTES

1. For details and dimenions not shown, see "TYPICAL EXTERIOR SLAB UNIT"
2. Interior Slab Unit shown, Exterior Slab section similar, except for edge slab details. See "TYPICAL EXTERIOR SLAB UNIT".

TYPICAL SLAB SECTION AT END DIAPHRAGM

1½" = 1'-0"

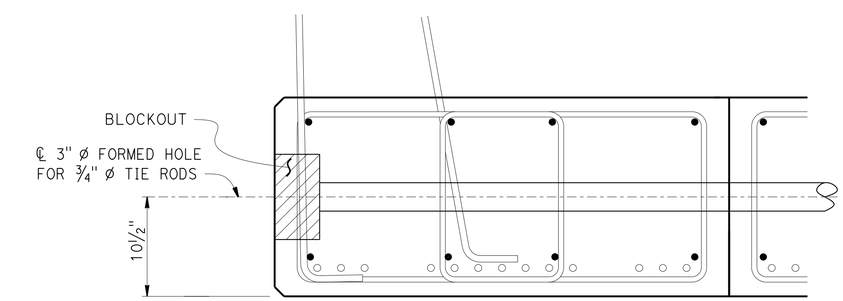

NOTES

1. For details and dimenions not shown, see "TYPICAL EXTERIOR SLAB UNIT"

TYPICAL SLAB SECTION AT INTERMEDIATE DIAPHRAGM

1½" = 1'-0"

DESIGN	BY Peter Soin	CHECKED Qi Zhao	
DETAILS	BY Jeff Thorne	CHECKED Qi Zhao	
QUANTITIES	BY Peter Soin	CHECKED Qi Zhao	

STATE OF CALIFORNIA
DEPARTMENT OF TRANSPORTATION

DIVISION OF ENGINEERING SERVICES
STRUCTURE DESIGN
DESIGN BRANCH 4

BRIDGE NO. 21-0008
POST MILE 9.3

SARCO CREEK BRIDGE (REPLACE)
PRECAST P/S SLAB DETAILS

STRUCTURES DESIGN DETAIL SHEET (ENGLISH) (REV. 09-01-10)

ORIGINAL SCALE IN INCHES FOR REDUCED PLANS 0 1 2 3

UNIT: 04
PROJECT NUMBER & PHASE: 0400000817 4
CONTRACT NO.: 04-2A3204

DISREGARD PRINTS BEARING EARLIER REVISION DATES

REVISION DATES: 12-22-15 1-7-16 1-28-16 2-16-16

SHEET 12 OF 18

FILE => 21-0008-e-pcslbmdts.dgn

USERNAME => s126849 DATE PLOTTED => 04-AUG-2016 TIME PLOTTED => 14:32

DIST	COUNTY	ROUTE	POST MILES TOTAL PROJECT	SHEET No.	TOTAL SHEETS
04	Nap	121	9.2/9.4	109	114

REGISTERED CIVIL ENGINEER 2-8-16 DATE

3-28-16
PLANS APPROVAL DATE

REGISTERED PROFESSIONAL ENGINEER PETER SOIN No. 37231 Exp. 6-30-16 CIVIL STATE OF CALIFORNIA

The State of California or its officers or agents shall not be responsible for the accuracy or completeness of scanned copies of this plan sheet.

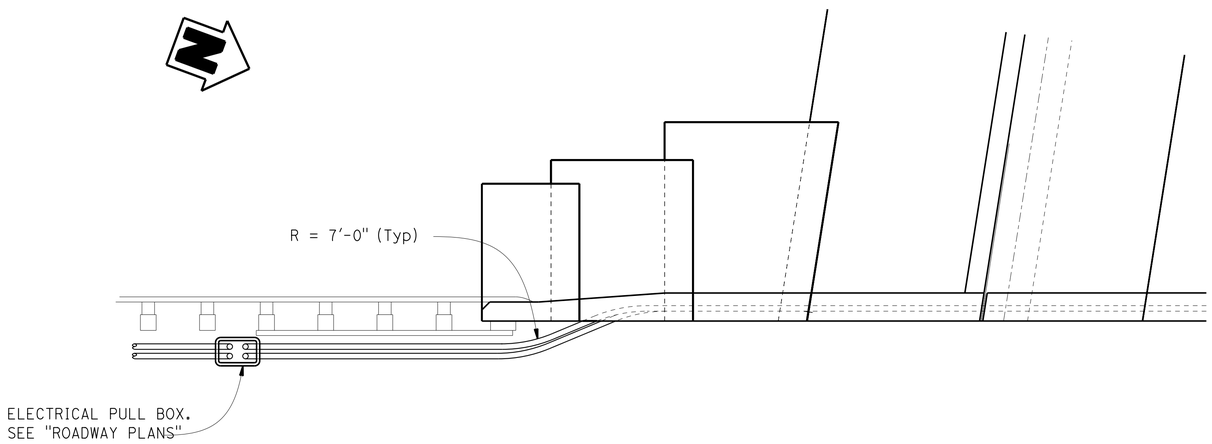

PLAN
1/4" = 1'-0"

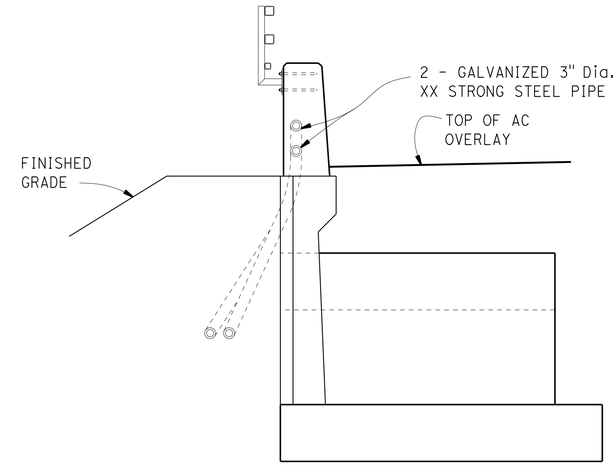

SECTION A-A
1/2" = 1'-0"

NOTES

1. Typical 3"Ø conduit installation shown for all four wingwalls.
2. Typical 3"Ø conduit installation shown for left and right concrete barriers.

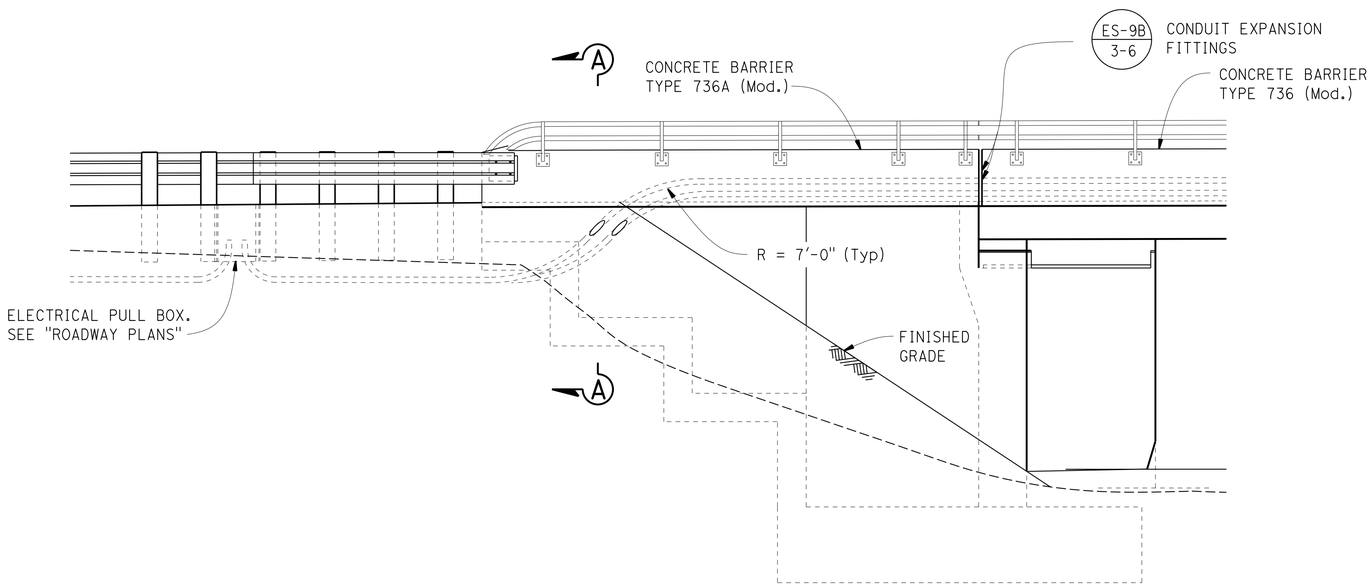

ELEVATION
1/4" = 1'-0"

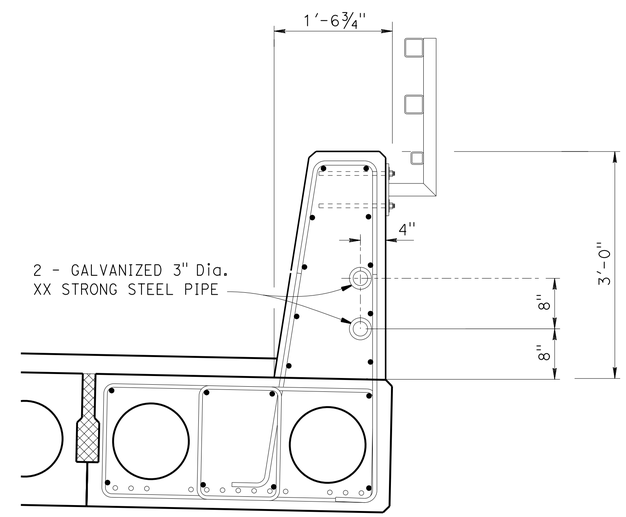

CONDUIT LOCATION FOR CONCRETE BARRIER TYPE 736 (Mod)
1" = 1'-0"

DESIGN	BY Peter Soin	CHECKED Qi Zhao	
DETAILS	BY Jeff Thorne	CHECKED Qi Zhao	
QUANTITIES	BY Peter Soin	CHECKED Qi Zhao	

STATE OF CALIFORNIA
DEPARTMENT OF TRANSPORTATION

DIVISION OF ENGINEERING SERVICES
STRUCTURE DESIGN
DESIGN BRANCH 4

BRIDGE NO. 21-0008
POST MILE 9.3

SARCO CREEK BRIDGE (REPLACE)
MISCELLANEOUS DETAILS NO. 1

STRUCTURES DESIGN DETAIL SHEET (ENGLISH) (REV. 09-01-10)

ORIGINAL SCALE IN INCHES FOR REDUCED PLANS 0 1 2 3

UNIT: 59-3579
PROJECT NUMBER & PHASE: 0400000817 4
CONTRACT NO.: 04-2A3204

DISREGARD PRINTS BEARING EARLIER REVISION DATES

REVISION DATES 12-22-15 1-14-16 1-20-16

SHEET 13 OF 18

FILE => 21-0008-f-mscdts01.dgn

USERNAME => s126849 DATE PLOTTED => 04-AUG-2016 TIME PLOTTED => 14:33

DIST	COUNTY	ROUTE	POST MILES TOTAL PROJECT	SHEET No.	TOTAL SHEETS
04	Nap	121	9.2/9.4	110	114

REGISTERED CIVIL ENGINEER 2-8-16 DATE

3-28-16
PLANS APPROVAL DATE

REGISTERED PROFESSIONAL ENGINEER PETER SOIN No. 37231 Exp. 6-30-16 CIVIL STATE OF CALIFORNIA

The State of California or its officers or agents shall not be responsible for the accuracy or completeness of scanned copies of this plan sheet.

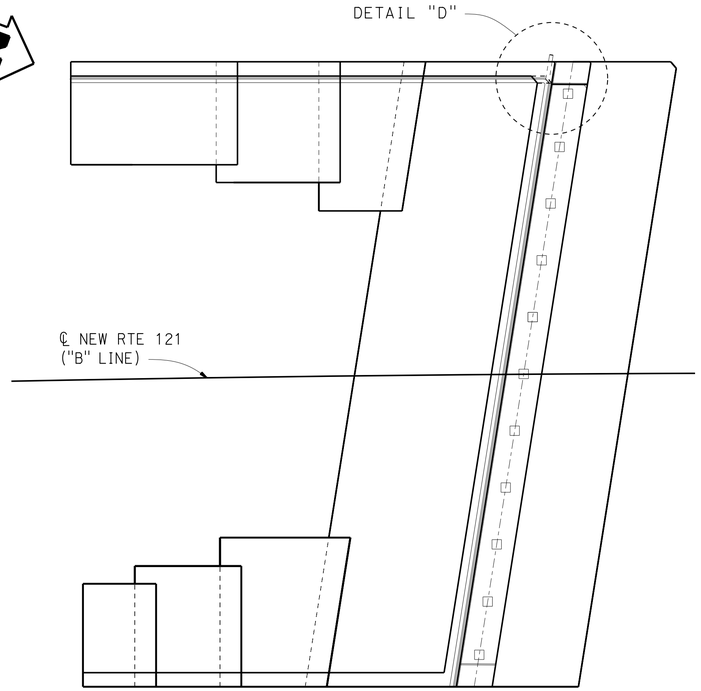

PART PLAN

1/4" = 1'-0"

Notes:

1. Longitudinal keyways to be filled with mortar after to tensioning tie rods.
2. For concrete strength, see "Typical Section" sheet.
3. Polyester overlay to be placed after tensioning tie rods.
4. 3" ø hole in interior diaphragm to be filled with grout after tie rod is tensioned.
5. Tie Rod blockouts to be filled with mortar after grout has been placed.

POST TENSIONING NOTES

Tie Rod

P_f = 20 kips

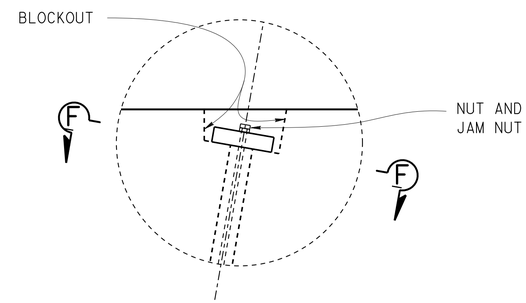

DETAIL "F"

NO SCALE

Note: For location Details "F", see "Precast Slab layout" sheet

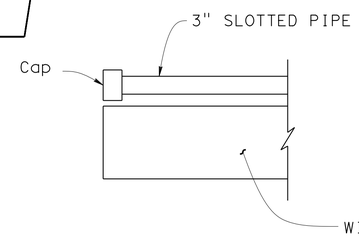

DETAIL "E"

No Scale

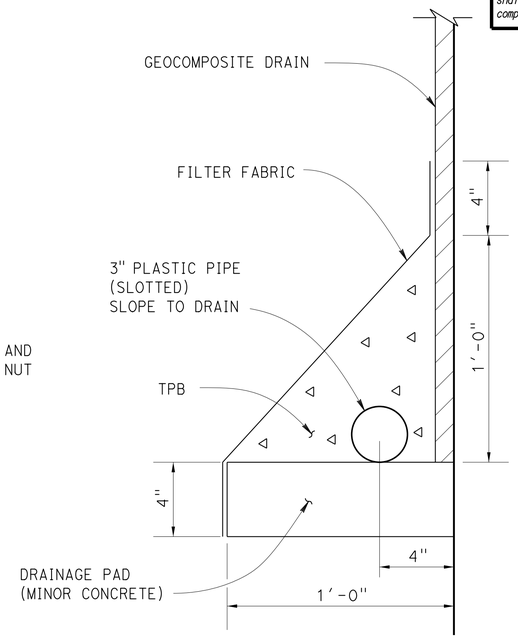

DETAIL "G"

3" = 1'-0"

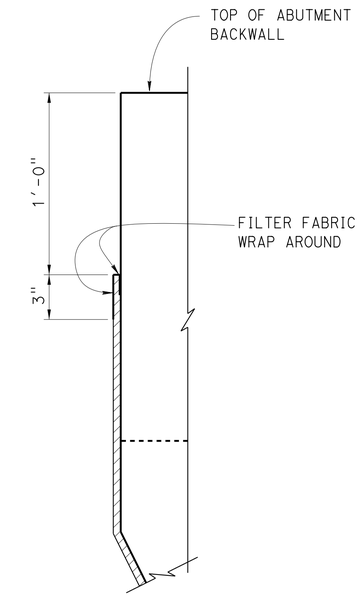

DETAIL "H"

NO SCALE

WEEP HOLE AND GEOCOMPOSITE DRAIN

Notes:

A. Geocomposite drain, cement treated permeable base, and 3"ø slotted plastic pipe continuous behind retaining wall or abutment. Cap ends of pipe. Provide "Tee" connection at each 4"ø drain.

B. Connect the low end of plastic pipe to the main outlet pipe as applicable.

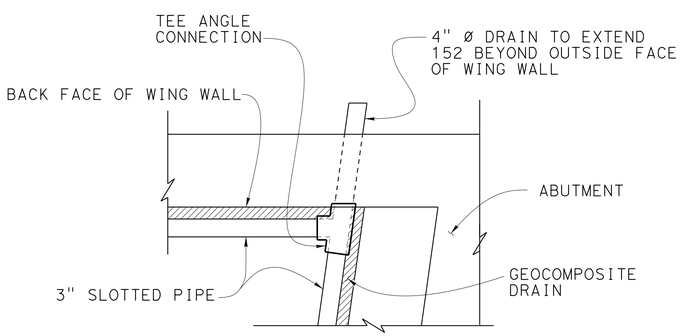

DETAIL "D"

No Scale

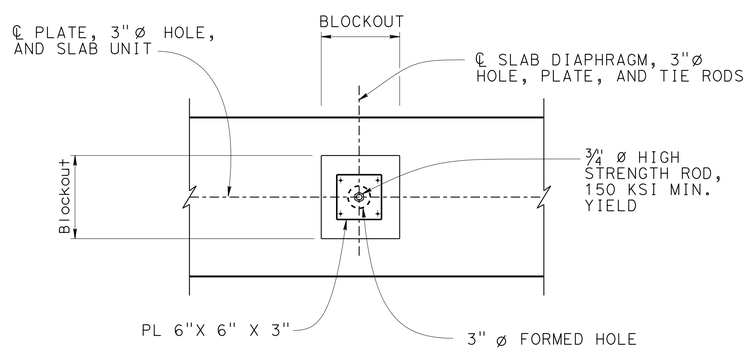

SECTION F-F

NO SCALE

DESIGN	BY Peter Soin	CHECKED Qi Zhao	
DETAILS	BY Jeff Thorne	CHECKED Qi Zhao	
QUANTITIES	BY Peter Soin	CHECKED Qi Zhao	

STATE OF CALIFORNIA
DEPARTMENT OF TRANSPORTATION

DIVISION OF ENGINEERING SERVICES
STRUCTURE DESIGN
DESIGN BRANCH 4

BRIDGE NO. 21-0008
POST MILE 9.3

SARCO CREEK BRIDGE (REPLACE)
MISCELLANEOUS DETAILS NO. 2

STRUCTURES DESIGN DETAIL SHEET (ENGLISH) (REV. 09-01-10)

ORIGINAL SCALE IN INCHES FOR REDUCED PLANS 0 1 2 3

UNIT: 04
PROJECT NUMBER & PHASE: 0400000817 4
CONTRACT NO.: 04-2A3204

DISREGARD PRINTS BEARING EARLIER REVISION DATES

REVISION DATES 1-20-16 2-16-16

SHEET 14 OF 18

FILE => 21-0008-f-mscdts02.dgn

USERNAME => s126849 DATE PLOTTED => 04-AUG-2016 TIME PLOTTED => 14:33

Dist	COUNTY	ROUTE	POST MILES TOTAL PROJECT	SHEET No.	TOTAL SHEETS
04	Nap	121	9.2/9.4	111	114

LICENSED LANDSCAPE ARCHITECT

3-28-16
PLANS APPROVAL DATE

LICENSED LANDSCAPE ARCHITECT MARTIN A. HOGAN No. 4054 Signature 3-31-17 Renewal Date Date STATE OF CALIFORNIA

THE STATE OF CALIFORNIA OR ITS OFFICERS OR AGENTS SHALL NOT BE RESPONSIBLE FOR THE ACCURACY OR COMPLETENESS OF SCANNED COPIES OF THIS PLAN SHEET.

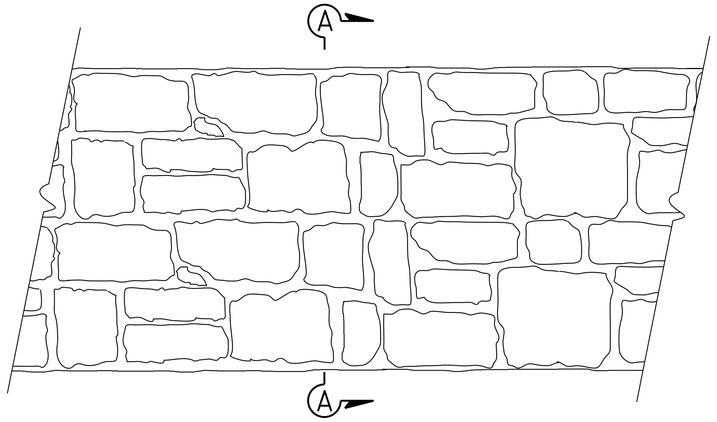

ASHLAR STONE TEXTURE

No Scale

MAXIMUM HORIZONTAL STONE SIZE = 6"-28"
MAXIMUM VERTICAL STONE SIZE = 6"-21"

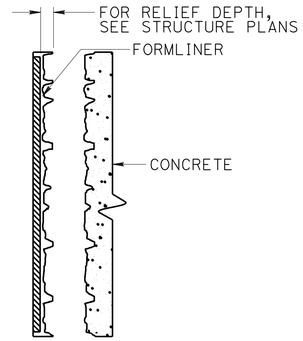

SECTION A-A

No Scale

CONCRETE BASE STAINS

Description	FED-STD-595 color no.	Percentage of surface area	Product
Dark Brown	34084	40%	Stain
Medium Brown	30099	25%	Stain
Medium Grey	36492	20%	Stain
Tan	33448	15%	Stain

NOTE:
The final color of the stained concrete must incorporate the colors of FED-STD-595 as shown on plans.

ACCENT COLORS

Description	FED-STD-595 color no.	Percentage of surface area	Product
Black	37038	15% Mottling	Stain
Light Gold	33245	15% Flecking	Paint
Medium Gold	30215	60% Flecking	Paint
Dark Rust	30111	10% Flecking	Paint

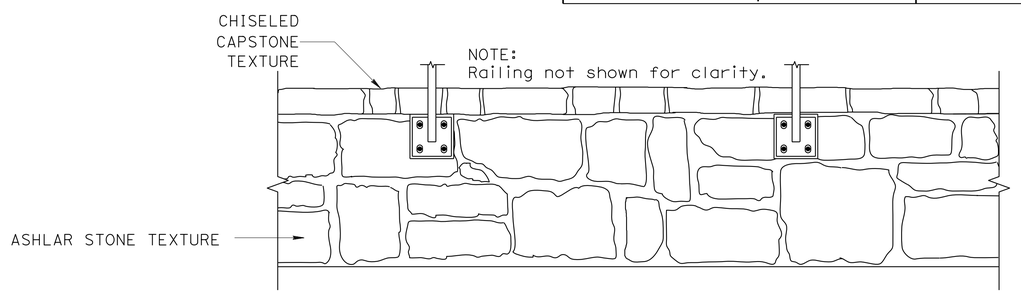

ASHLAR STONE TEXTURE (ON OUTSIDE FACE OF MODIFIED BARRIER)

No Scale

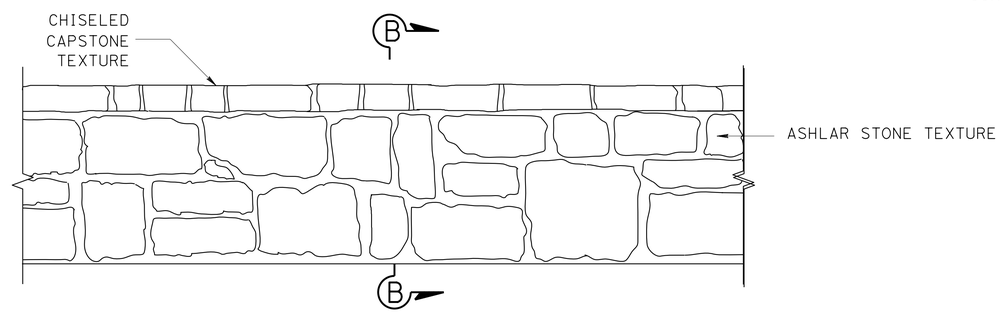

ASHLAR STONE TEXTURE (ON INSIDE FACE OF MODIFIED BARRIER)

No Scale

MAXIMUM RELIEF = 1/2"
AVERAGE RELIEF = 1/4"
MAXIMUM HORIZONTAL STONE SIZE = 6"-28"
MAXIMUM VERTICAL STONE SIZE = 6"-21"

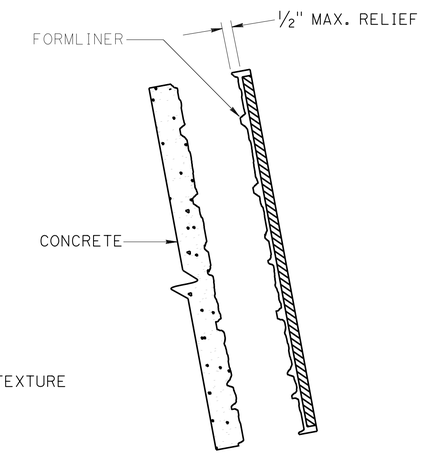

SECTION B-B

No Scale

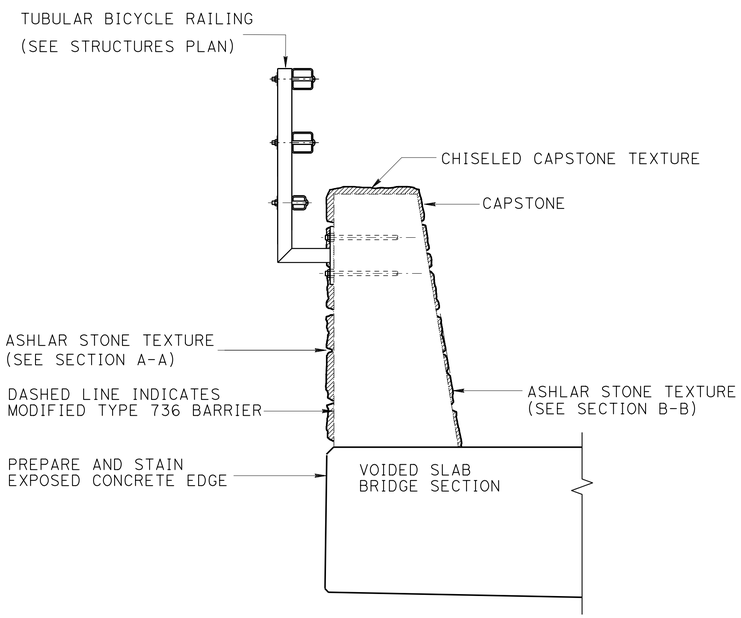

BARRIER SECTION

No Scale

NOTE:
Chiseled Capstone Texture shall be 18" maximum width and make up of 65% to 75% with a random placement of 5" to 9" width.

CONSTRUCTION DETAILS
ARCHITECTURAL SURFACE BARRIER

BRIDGE NO.	SARCO CREEK BRIDGE (REPLACE)
21-0008	
POST MILE	ARCHITECTURAL DETAILS
9.3	

PROJECT NUMBER & PHASE: 0400000817 1
UNIT: 59-3579 CONTRACT NO.: 04-2A3204

DISREGARD PRINTS BEARING EARLIER REVISION DATES

REVISION DATES			SHEET	OF
1-20-16			15	18

LAST REVISION 00-00-00

DATE PLOTTED => 04-AUG-2016
TIME PLOTTED => 14:33

STATE OF CALIFORNIA - DEPARTMENT OF TRANSPORTATION
Caltrans® LANDSCAPE ARCHITECTURE

FUNCTIONAL SUPERVISOR: SUSAN LINDSAY
CALCULATED-DESIGNED BY: MARTIN A. HOGAN
CHECKED BY: SUSAN LINDSAY
REVISED BY
DATE REVISED

DIST	COUNTY	ROUTE	POST MILES TOTAL PROJECT	SHEET No.	TOTAL SHEETS
04	Nap	121	9.2/9.4	112	114

REGISTERED CIVIL ENGINEER — DATE 2-8-16

3-28-16
PLANS APPROVAL DATE

REGISTERED PROFESSIONAL ENGINEER — PETER SOIN — No. 37231 — Exp. 6-30-16 — CIVIL — STATE OF CALIFORNIA

The State of California or its officers or agents shall not be responsible for the accuracy or completeness of electronic copies of this plan sheet.

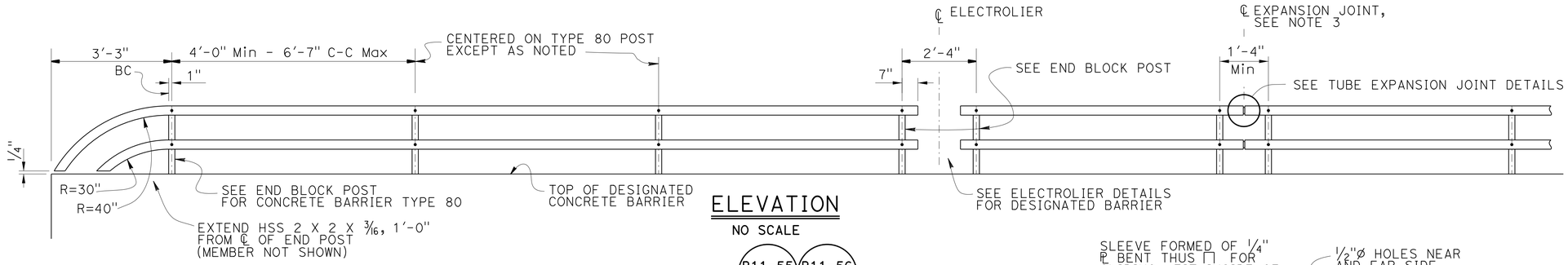

ELEVATION
NO SCALE

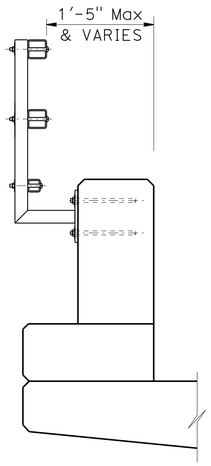

NOTE:
For details not shown, see "TYPE 732 OR 736"

TYPE 80 END BLOCK POST
1" = 1'-0"

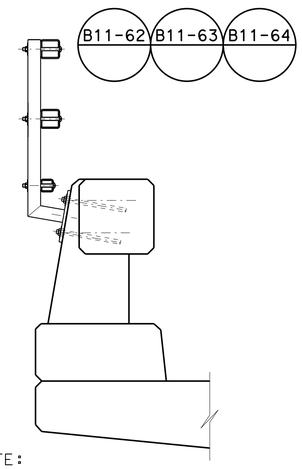

NOTE:
For details not shown, see "TYPE 732 OR 736"

TYPE 80
1" = 1'-0"

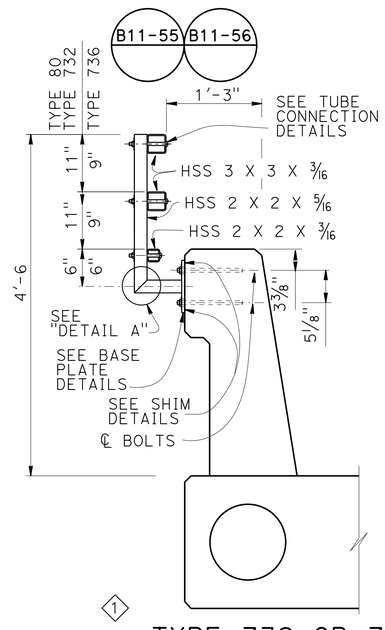

TYPE 732 OR 736
1" = 1'-0"

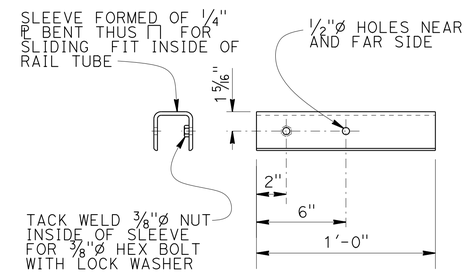

SLEEVE DETAIL
NO SCALE

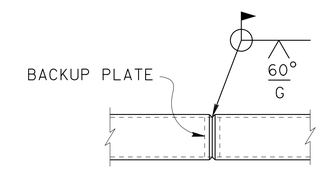

WELDED SPLICE DETAIL
NO SCALE

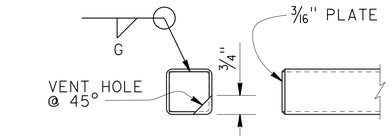

RAIL CAP DETAIL
NO SCALE

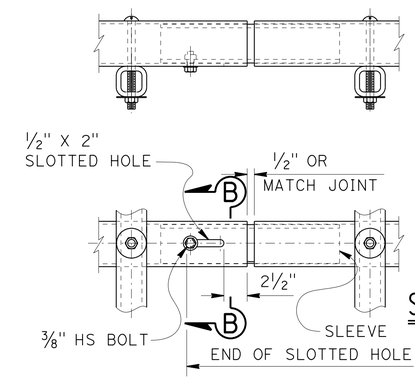

TUBE EXPANSION JOINT DETAILS
NO SCALE

SECTION B-B
NO SCALE

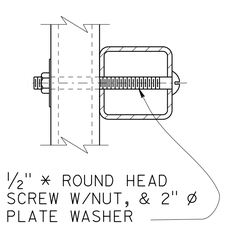

TUBE CONNECTION DETAIL
NO SCALE

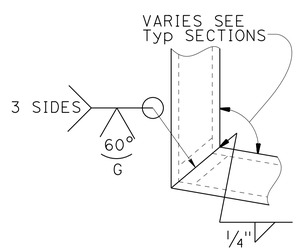

DETAIL A
NO SCALE

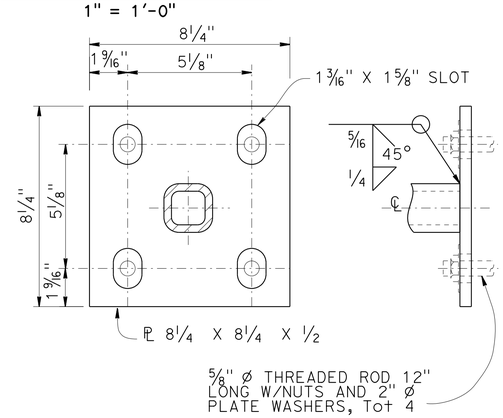

BASE PLATE DETAIL
NO SCALE

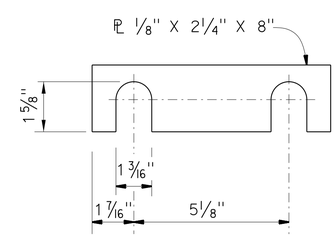

SHIM DETAILS
NO SCALE

NOTES:

1. Post must be normal to railing.
2. Rail tubes must be shop bent or fabricated to fit horizontal curve when radius is less than 950'.
3. Tube expansion joints must be located in the tubes spanning deck or wall joints. Increase joint width in tubes to match expansion joint width and increase sleeve length correspondingly.
4. Top rail tube must be continuous over not less than two posts except a short post spacing is permitted near deck or wall joints, electroliers, or other rail discontinuities as noted.
5. See Project Plans for limits of tubular bicycle railing.

REVISED STANDARD DRAWING

FILE NO. xs16-035

APPROVAL DATE October 2014

1 — Modified detail

STATE OF CALIFORNIA
DEPARTMENT OF TRANSPORTATION

DIVISION OF ENGINEERING SERVICES

BRIDGE NO. 21-0008
POST MILE 9.3

SARCO CREEK BRIDGE (REPLACE)
CONCRETE BARRIER TYPE 80, 732 & 736
TUBULAR BICYCLE RAILING DETAILS

DS OSD 2147A (ENGLISH STANDARD DRAWING "XS" BORDER REV. (02-02-11))

ORIGINAL SCALE IN INCHES FOR REDUCED PLANS 0 1 2 3

UNIT: 59-3579
PROJECT NUMBER & PHASE: 0400000817 4
CONTRACT NO.: 04-2A3204

DISREGARD PRINTS BEARING EARLIER REVISION DATES

REVISION DATES: 8-19-12 10-4-14 1-15-16

SHEET 16 OF 18

FILE => 21-0008-m-xs16-035.dgn

USERNAME => s126849 DATE PLOTTED => 04-AUG-2016 TIME PLOTTED => 14:33

DIST	COUNTY	ROUTE	POST MILES TOTAL PROJECT	SHEET No	TOTAL SHEETS
04	Nap	121	8.9/9.4	113	114

09-08-14
REGISTERED CIVIL ENGINEER

3-28-16
PLANS APPROVAL DATE

REGISTERED PROFESSIONAL ENGINEER
Meng-Hsi Hung
No. 69739
Exp. 6-30-16
CIVIL
STATE OF CALIFORNIA

The State of California or its officers or agents shall not be responsible for the accuracy or completeness of electronic copies of this plan sheet.

This LOTB sheet was prepared in accordance with the Caltrans Soil & Rock Logging, Classification, & Presentation Manual (2010 Edition).

BENCH MARK

NAP32: CT Brass Disk
Set on the SB shoulder
of SR-121 north of
the driveway to
1953 Silverado Trail
N 1,879,535.312
E 6,183,290.491
Elev. 26.375′
Sta. 16+76

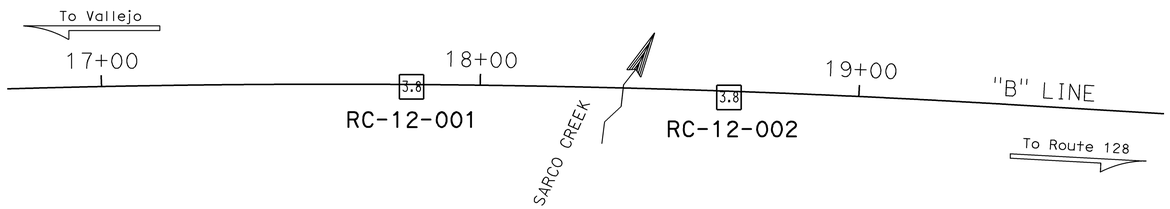

PLAN
1"=20′

ENGINEERING SERVICES			GEOTECHNICAL SERVICES	STATE OF CALIFORNIA DEPARTMENT OF TRANSPORTATION	DIVISION OF ENGINEERING SERVICES OFFICE OF GEOTECHNICAL DESIGN BRANCH	BRIDGE NO. 21-0008 POST MILES 8.9/9.4	SARCO CREEK BRIDGE (REPLACEMENT) LOG OF TEST BORINGS 1 OF 2
FUNCTIONAL SUPERVISOR	DRAWN BY: M. Reynolds	11/12	FIELD INVESTIGATION BY: M. Hung				
NAME: H. Nikoui	CHECKED BY: M. Gaffney	09/14					

OGS CIVIL LOG OF TEST BORINGS SHEET

ORIGINAL SCALE IN INCHES FOR REDUCED PLANS 0 1 2 3

UNIT: 3660
PROJECT NUMBER & PHASE: 0400000817 4 CONTRACT NO.: 04-2A3204

DISREGARD PRINTS BEARING EARLIER REVISION DATES

REVISION DATES | SHEET 17 | OF 18

FILE => 21-0008-x-lotb01.dgn

USERNAME = s126849 DATE PLOTTED => 04-AUG-2016 TIME PLOTTED => 14:31

DIST	COUNTY	ROUTE	POST MILES TOTAL PROJECT	SHEET No	TOTAL SHEETS
04	Nap	121	8.9/9.4	114	114

09-08-14
REGISTERED CIVIL ENGINEER

3-28-16
PLANS APPROVAL DATE

REGISTERED PROFESSIONAL ENGINEER Meng-Hsi Hung No. 69739 Exp. 6-30-16 CIVIL STATE OF CALIFORNIA

The State of California or its officers or agents shall not be responsible for the accuracy or completeness of electronic copies of this plan sheet.

This LOTB sheet was prepared in accordance with the Caltrans Soil & Rock Logging, Classification, & Presentation Manual (2010 Edition).

NOTE:
1. PP=unconfined compressive strength (tsf) as measured by pocket penetrometer.
2. RC-12-002 groundwater encountered but not measured.

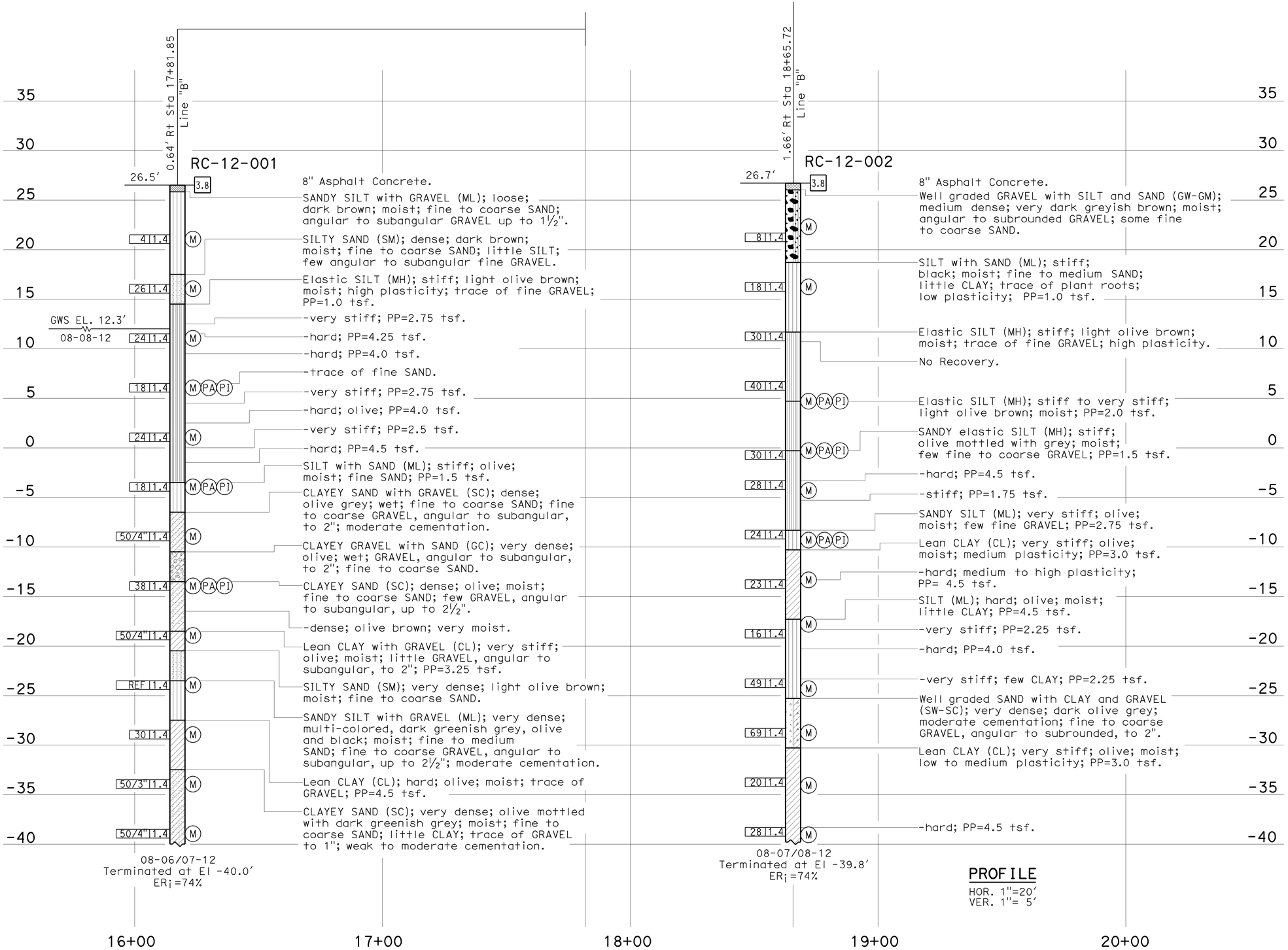

PROFILE
HOR. 1"=20'
VER. 1"= 5'

ENGINEERING SERVICES		GEOTECHNICAL SERVICES	STATE OF CALIFORNIA DEPARTMENT OF TRANSPORTATION	DIVISION OF ENGINEERING SERVICES OFFICE OF GEOTECHNICAL DESIGN BRANCH	BRIDGE NO. 21-0008 POST MILES 8.9/9.4	SARCO CREEK BRIDGE (REPLACEMENT)
FUNCTIONAL SUPERVISOR	DRAWN BY: M. Reynolds 11/12	FIELD INVESTIGATION BY:				LOG OF TEST BORINGS 2 OF 2
NAME: H. Nikoui	CHECKED BY: M. Gaffney 09/14	M. Hung				

OGS CIVIL LOG OF TEST BORINGS SHEET

ORIGINAL SCALE IN INCHES FOR REDUCED PLANS 0 1 2 3

UNIT: 3660
PROJECT NUMBER & PHASE: 0400000817 4 CONTRACT NO.: 04-2A3204

DISREGARD PRINTS BEARING EARLIER REVISION DATES

REVISION DATES | SHEET 18 | OF 18

FILE => 21-0008-x-lotb02.dgn

USERNAME => s128849 DATE PLOTTED => 04-AUG-2016 TIME PLOTTED => 14:31